MY 2019 H625 TABLE OF CONTENT(ТАБЛИЦА СОДЕРЖАНИЯ)

A1 DRIVER INFORMATION / DISPLAYS (ИНФОРМАЦИЯ ОБ УПРАВЛЕНИИ / ДИСПЛЕИ)

PHJC46-70A000-A INSTRUMENT CLUSTER(КОМБИНАЦИЯ ПРИБОРОВ)

A2 INFOTAINMENT (Информационная система)

PHJC46-70A102-A RADIO (1-DIN)

PHJC46-70A102-B RADIO (2-DIN)

B2 TRANSMISSION(трансмиссия)

PHJC46-70B023-A AUTOMATIC TRANSMISSION

B3 POWERTRAIN ENGINE CONTROLS (ОРГАНЫ УПРАВЛЕНИЯ ДВИГАТЕЛЕМ ТРАНСМИССИИ)

PHJC46-70B041-A1 ENGINE CONTROL SYSTEM(СИСТЕМА УПРАВЛЕНИЯ ДВИГАТЕЛЕМ)

PHJC46-70B041-A2 ENGINE CONTROL SYSTEM (VEHICLE SIDE) (СИСТЕМА УПРАВЛЕНИЯ ДВИГАТЕЛЕМ (СО СТОРОНЫ ТРАНСПОРТНОГО СРЕДСТВА))

B4 ENGINE POWERPACKS (БЛОКИ ПИТАНИЯ ДВИГАТЕЛЯ)

PHJC46-70B200-A SELECTIVE CATALYTIC REDUCTION

(SCR)(СЕЛЕКТИВНОЕ КАТАЛИТИЧЕСКОЕ ВОССТАНОВЛЕНИЕ)

PHJC46-70B200-B SELECTIVE CATALYTIC REDUCTION (SCR)

PHJC46-70B201-A DIESEL PARTICULATE FILTER (DPF)(ДИЗЕЛЬНЫЙ САЖЕВЫЙ ФИЛЬТР)

C1 POWER DISTRIBUTION (РАСПРЕДЕЛЕНИЕ МОЩНОСТИ)

PHJC46-70C000-A1 POWER DISTRIBUTION BOX
PHJC46-70C000-A2 POWER DISTRIBUTION BOX
PHJC46-70C000-A3 POWER DISTRIBUTION BOX
PHJC46-70C000-A4 POWER DISTRIBUTION BOX
PHJC46-70C000-A5 POWER DISTRIBUTION BOX
PHJC46-70C000-A6 POWER DISTRIBUTION BOX
PHJC46-70C000-A7 POWER DISTRIBUTION BOX
PHJC46-70C001-A0 BODY CONTROL MODULE (BCM)(МОДУЛЬ УПРАВЛЕНИЯ КОРПУСОМ)
PHJC46-70C001-A1 BODY CONTROL MODULE (BCM)
PHJC46-70C001-A2 BODY CONTROL MODULE (BCM)
PHJC46-70C001-A3 BODY CONTROL MODULE (BCM)
PHJC46-70C001-A4 BODY CONTROL MODULE (BCM)
PHJC46-70C001-A5 BODY CONTROL MODULE (BCM)
PHJC46-70C001-A6 BODY CONTROL MODULE (BCM)

C2 GROUNDING(заземление)

PHJC46-70C021-A1 GROUNDING - INSTRUMENT PANEL
PHJC46-70C021-A2 GROUNDING - INSTRUMENT PANEL
PHJC46-70C022-A1 GROUNDING - BODY
PHJC46-70C022-A2 GROUNDING - BODY
PHJC46-70C023-A1 GROUNDING - FRAME
PHJC46-70C023-A2 GROUNDING - FRAME
PHJC46-70C023-A3 GROUNDING - FRAME

C3 VEHICLE NETWORKS(СЕТИ ТРАНСПОРТНЫХ СРЕДСТВ)

PHJC46-70C030-A1 HS-CAN 1 & HS-CAN 3 & MS-CAN NETWORK
PHJC46-70C030-A2 ENGINE CAN J1939 NETWORK
PHJC46-70C030-A3 VEHICLE CAN J1939 NETWORK
PHJC46-70C030-A4 VEHICLE CAN J1939 NETWORK
PHJC46-70C030-A5 VEHICLE CAN J1939 NETWORK
PHJC46-70C030-A6 LOCAL INTERCONNECT NETWORK (LIN)
PHJC46-70C030-A7 FLASH & PRIVATE CAN NETWORK
PHJC46-70C030-A8 I-CAN (FLEET MANAGEMENT & AFTERMARKET CAN)

C4 STARTING(начало)

PHJC46-70C040-A CONVENTIONAL STARTING & CHARGING

C6 DRIVELINE CONTROL (УПРАВЛЕНИЕ ТРАНСМИССИЕЙ)

PHJC46-70C061-A REAR AXLE DIFFERENTIAL LOCK-OUT

C7 VEHICLE DYNAMICS (ДИНАМИКА ТРАНСПОРТНОГО СРЕДСТВА)

PHJC46-70C071-A1 EBS / ESP
PHJC46-70C071-A2 EBS / ESP
PHJC46-70C071-A3 EBS / ESP
PHJC46-70C071-A4 EBS / ESP
PHJC46-70C076-A ELECTRONICALLY CONTROLLED AIR SUSPENSION (ECAS)
PHJC46-70C081-A TIRE PRESSURE MONITORING SYSTEM (TPMS)
PHJC46-70C082-A HORN

C8 ELECTRIFICATION (ЭЛЕКТРИФИКАЦИЯ)

PHJC46-70C091-A BATTERY MONITORING SYSTEM

C9 CLIMATE CONTROL (КЛИМАТ-КОНТРОЛЬ)

PHJC46-70C122 AUTOMATIC CLIMATE CONTROL
PHJC46-70C124-A FUEL FIRED DRY TYPE HEATER
PHJC46-70C124-B FUEL FIRED WET TYPE HEATER

C10 INTERIOR LIGHTING (ВНУТРЕННЕЕ ОСВЕЩЕНИЕ)

PHJC46-70C140-A INTERIOR LIGHTING
PHJC46-70C140-B INTERIOR LIGHTING 2
PHJC46-70C142-A IP & SWITCH ILLUMINATION

C11 EXTERIOR LIGHTING (НАРУЖНОЕ ОСВЕЩЕНИЕ)

PHJC46-70C160-A1 HEAD LIGHTING - LED
PHJC46-70C160-A2 FOG LIGHTING
PHJC46-70C160-A3 TURN AND HAZARD LIGHTING
PHJC46-70C162-A BRAKE LIGHTING
PHJC46-70C163-A BACKUP LIGHTING
PHJC46-70C164-A PARK - STAND LIGHTING
PHJC46-70C165-A HEADLAMP LEVELING
PHJC46-70C166-A ROOF BEACON LIGHTING

C12 ACTIVE SAFETY (АКТИВНАЯ БЕЗОПАСНОСТЬ)

PHJC46-70C183-A ADAPTIVE CRUISE CONTROL
PHJC46-70C189-A PREDICTIVE CRUISE CONTROL (PCCM)

C13 LOCKS / LATCHES (ЗАМКИ / ЗАЩЕЛКИ)

PHJC46-70C202-A POWER LOCKS

C15 MIRRORS (зеркало)

PHJC46-70C243-A POWER MIRROR W HEATED

C16 SEATS (сиденья)

PHJC46-70C271-A HEATED SEATS / SEAT BELT MINDER

C18 POWER WINDOWS (ЭЛЕКТРИЧЕСКИЕ СТЕКЛОПОДЪЕМНИКИ)

PHJC46-70C340-A POWER WINDOWS

C19 MOONROOF / POWER SHADE / POWER SLIDING WINDOW (ЛЮК НА КРЫШЕ / ШТОРКА С ЭЛЕКТРОПРИВОДОМ / РАЗДВИЖНОЕ ОКНО С ЭЛЕКТРОПРИВОДОМ)

PHJC46-70C370-A POWER SUNROOF

C21 VISIBILITY

PHJC46-70C400-A WIPER WASHER - LANE DEPARTURE WARNING & RAIN SENSOR
PHJC46-70C403-A HEATED WINDSHIELD

C22 SECURITY

PHJC46-70C425-A FLEET MANAGEMENT
PHJC46-70C427-A TACHOGRAPH
PHJC46-70C428-A ERA GLONASS SYSTEM

C23 EXTERIOR ACCESSORIES (ВНЕШНИЕ АКСЕССУАРЫ)

PHJC46-70C441-A1 TRAILER TOW & AFTERMARKET CONNECTORS
PHJC46-70C444-A INTARDER SYSTEM

C24 INTERIOR

PHJC46-70C460-A POWER SUNBLIND
PHJC46-70C462-A CIGAR LIGHTER - POWER POINTS
PHJC46-70C463-A 24V / 12V VOLTAGE CONVERTER

C25 SPECIAL VEHICLES(СПЕЦИАЛЬНЫЕ ТРАНСПОРТНЫЕ СРЕДСТВА)

PHJC46-70C481-A ACCESSORY LIGHTING
PHJC46-70C484-A POWER TAKE OFF
PHJC46-70C485-A CABIN TILTING

TOPOLOGY SHEET TOPOLOGY SHEET – 2 (ЛИСТ ТОПОЛОГИИ)

REMOVED PHJC46-70002-AA
RELEASED PHJC46-70002-AB

C13503396, C13503403, C13503406, C13503485, C13503875, C13506791, C13505065, C13504369, C13504371, C13541650, C13498882, C13499095, C13526401, C13494134, C13493284, C13494291, C13494463, C13494378, C13495402, C13495387, C13494615, C13494656, C13396165, C13495181, C13495194, C13495214, C13495217, C13495219, C13506323, C13497953.

DCRs
533, 548, 549, 552, 553, 554, 555, 556, 557, 558, 559, 560, 581, 592, 593, 594, 598, 599, 602, 640, 641, 654, 666, 712, 728, 752, K7, K19.

OESE-E-13645960-000 20180504

AGEZER1 ENALBANT FKARADE3

H625 PP PHASE RELEASE

REMOVED PHJC46-70002-AB
RELEASED PHJC46-70002-AC

A13631278, A13654944, A13663628, A13666535

DCRs
565, 566, 567, 568, 569, 570, 571, 572, 573, 574, 575, 582, 583, 584, 585, 586, 587, 588, 589, 590, 591, 629, 630, 631, 632, 633, 634, 635, 636, 367, 638, 639, 672, 744, 753, K22, K23, K24, K25, K31, K32, K33, K34, K35, K36, K38, K39, K41, K44, K45, K46, K47, K48, K49, K50, K51, K52, K53, K54, K55, K56, K57, K58, K61, K62, K69, K70, K83, K84, K88, K96, K99, K106, K107, K108, K142, K145, K146, K153, K157, K158, K160, K161, K163, K170, K178, K190, K191, K192, K199, K200, K211, K275, K314, K315

OESE-E-13697250-000 20180809

FKARADE3 AGEZER1 TDERDIYO

H625 MP1 PHASE RELEASE

REMOVED PHJC46-70002-AC
RELEASED PHJC46-70002-AD

A13672762

C13644853,C13644964,C13648515,C13641252,C13644873,C13644970, C13644852,C13644972,C13644965,C13644899,C13644918,C13644853, C13644864,C13644846,C13647199,C13645073,C13645074,C13645079, C13645075,C13645076,C13644703,C13644723

DCRs
K159,K165,K166,K167,K168,K169,K171,K172,K173,K174,K175,K197, K277,K278,K279,K287,K290,K291,K292,K293,K294,K319

OESE-E-13735631-000 20181002

FKARADE3 AGEZER1 TDERDIYO

H625 MP2 PHASE RELEASE

REMOVED PHJC46-70002-AD
RELEASED PHJC46-70002-AE

DCRs
K289,K302,K303,K305,K335,K336,K337,K361,K362,K369,K370,K371,K375

OESE-E-13756922-000 20181101

FKARADE3 AGEZER1 TDERDIYO

H625 PJ1 PHASE RELEASE

REMOVED PHJC46-70002-AE
RELEASED PHJC46-70002-AF

A13833877,A13834522,A13834836,A13843285,A13847917

C13771427,C13778540,C13772452,C13771534,C13786717,C13721155, C13729276,C13722216,C13720991,C13721102,C13721142,C13722977

DCRs
K300,K367,K379,K393,K394,K395,K396,K397,K398,K399,K400,K401, K403,K413,K417,K420,K421,K422,K426,K427,K459,K460,K461,K468

OESE-E-13775725-000 20190515

NYAYLA1 AGEZER1 TDERDIYO

H625 2019 LP3 PHASE RELEASE

REMOVED PHJC46-70002-AF
RELEASED PHJC46-70002-AG

A13937672

C13850086,C13839664,C13839663,C13839665,C13837861,C13834823, C13843321

DCRs
K439,K443,K457,K458,K462,K463,K464,K465,K467,K476,K477,K478, K479,K480,K481,K486,K492,K500,K635,K636,K640,K641,K642,K669,

K690,K693,K705,K706,K775

OESE-E-13968480-000 20191202

NYAYLA1 AGEZER1 TDERDIYO

REFERENCE
PART MUST COMPLY WITH RESTRICTED SUBSTANCE MANAGEMENT STANDARD WSS-M99P9999 A1 TO SAFEGUARD HEALTH SAFETY AND THE ENVIRONMENT

DRAFTED IN ACCORDANCE WITH FORD MOTOR COMPANY ENGINEERING CAD AND DRAFTING STANDARDS VERSION 27.0

3RD ANGLE PROJ
DIMENSIONS ARE IN MILLIMETERS

CAD TYPE	CAD LOC.	CAD FILE	DTM
X-E3		PHJC46-70002-AG	IS MASTER
OPER NO.	UNIT	DRAWING	SIZE
N/A	N/A		A1

H625 2019 LP3 Design
A1.01 - INSTRUMENT CLUSTER

LTRS	REVISIONS			
ORIGINATOR	CHECKER	ENGR APP	MATL APP	

POWER DISTRIBUTION BOX
24V KL30 BB
MINI 10 A FS056
CLUSTER
24V KL15/50 BB1_2
MINI 3 A FS068
CLUSTER
LDWS BUZZERS
FS072 3 A MINI
24V KL15/50 BB1_2
72-1
72-2
C2BB01
56-256-2
68-168-1
SBB56A_VT/RD_2TAD_0.75 14401" 2820 mm
S2BB56
SBB56B_VT/RD_2TAD_0.75 14401" 300 mm
SBB56C_VT/RD_2TAD_0.75 14401" 300 mm
CBB68A_GY/VT_2TAD_0.35 14401" 3120 mm
CBB72B_GN/VT_2TAD_0.35 14401" 2005 mm
B_GD214G_BK/BU_2TAD_0.35 14401" 990 mm
CBB72A_GN/VT_2TAD_0.50 14401" 1080 mm
S2BB72
C2RB10
KL15 CBB72 DIAG
KL31 #2744 ENABLE
BUZZER LHS (LDWS)
CBB72C_GN/VT_2TAD_0.35 14401" 305 mm
B_GD214C_BK/BU_2TAD_0.35 14401" 1270 mm
S2D214-B
S2D214-C
B_GD214L_BK/BU_2TBD_2.5 14401" 190 mm
C2RB11
KL15 CBB72 ENABLE
KL31 #2744 DIAG
BUZZER RHS (LDWS)
B_GD214L_BK/BU_2TBD_2.5 14401" 245 mm
B_GD214
SWITCH - BLENDING
OUTPUT 1 A388 CDC36 FUNC. ILL. #2617
C2SA388
CDC36A_GN/BN_2TAD_0.35 14A320_RHS" 250 mm
MCA30A_VT/GN_2TAD_0.35 14A320_RHS" 250 mm
C22-C1
C22-C2
CDC36B_GN/BN_2TAD_0.35 14401" 1385 mm
MCA30B_VT/GN_2TAD_0.35 14401" 1385 mm
MODULE - FLEET MANAGEMENT (B)
CT979 VG AH01B TBD-012-M
C2AH01B
MAH04B_WH/OG_2TAD_0.50 15A404" 2555 mm
JU5T-14489-CEA
C22-F1
C22-F2
JU5T-14489-AA
JU5T-14A459-AA
MAH04A_WH/OG_2TAD_0.50 14401" 2545 mm
BELT MINDER HS04 GD348
BELT MINDER W/ HEATED SEAT LHS
C3HS04
CR150F_BU/OG_2TAD_0.75 14A005" 3510 mm
C33-A1
C33-A2
CR150B_BU/OG_2TAD_0.35 14401" 2420 mm
TPAT + CRT31
TX CTRL VRT07
RX-IN VRT23
KL31 (TPAT) #2744
RT23
MODULE - PATS
C2RT23
CRT31A_YE_2TAD_0.35 14401" 590 mm
VRT07A_VT/BN_2TAD_0.35 14401" 660 mm
VRT23A_VT/GY_2TAD_0.35 14401" 660 mm
B_GD214E_BK/BU_2TAD_0.35 14401" 685 mm
DU5T-14489-FA
S2D214-B
B_GD214L_BK/BU_2TBD_2.5 14401" 190 mm
S2D214-C
B_GD214A_BK/BU_2TBD_2.5 14401" 245 mm
B_G2D214
EXT TEMP VE740
GND RMC27
H407
SENSOR - OUTSIDE AIR TEMPERATURE
C1H407
VE740B_VT/GY_2TAD_0.75 13B767" 430 mm
RMC27C_WH/BN_2TAD_0.75 13B767" 430 mm
C11-R2
C11-R1
VE740C_VT/GY_2TAD_0.75 13B712" 1605 mm
RMC27G_WH/BN_2TAD_0.75 13B712" 1605 mm
C12-U1
C12-U2
VE740A_VT/GY_2TAD_0.35 14401" 2800 mm
RMC27B_WH/BN_2TAD_0.75 14401" 2800 mm
JU5T-14A459-MA
GND RMC27
FUEL LEVEL RMC32
MC11
SENSOR - FUEL LEVEL
C1MC11
RMC27D_WH/BN_2TAD_0.75 14398" 5085 mm
RMC32B_GN/BU_2TAD_0.75 14398" 5085 mm
C12-F1
C12-F2
RMC27A_WH/BN_2TAD_0.35 14401" 2825 mm
RMC32A_GN/BU_2TAD_0.35 14401" 2825 mm
EU5T-14489-CB
EU5T-14A459-CC
LIN VHF04
A272
MODULE - DRY TYPE FUEL FIRED HEATER
C1A272
VHF04E_BN/VT_2TAD_0.75 14A005" 3775 mm
VHF04D_BN/VT_2TAD_0.35 14401" 2490 mm
B_GD214B_BK/BU_2TAD_0.75 14401" 1025 mm
B_GD214D_BK/BU_2TAD_0.75 14401" 1025 mm
B_GD214L_BK/BU_2TBD_2.5 14401" 190 mm
B_GD214A_BK/BU_2TBD_2.5 14401" 245 mm
B_G2D214
C2MC01-A
C2MC01-B
MC01-1
ФУНКЦИОНАЛЬНОЕ ОСВЕЩЕНИЕ FUNCTIONAL ILLUMINATION #2742
ФУНКЦИОНАЛЬНОЕ ОСВЕЩЕНИЕ FUNCTIONAL ILLUMINATION GD285
НИЗКИЙ УРОВЕНЬ ОХЛАЖДАЮЩЕЙ ЖИДКОСТИ LOW COOLANT LVL VE715
KL30 SBB56
KL30 SBB56
KL15 CBB68
НИЗКОЕ ДАВЛЕНИЕ МАСЛА LOW OIL PRESSURE #2506
ВНЕШНИЙ ЗУММЕР EXT BUZZER 1 ENABLE CLS03
EXT BUZZER 2 ENABLE CLS03
EXT BUZZER DIAG #2509
СМЕШИВАНИЕ SW BLENDING SW CDC36
HS OUT1
ХРАНИТЕЛЬ ТРАНСПОРТНОГО СРЕДСТВА VEHICLE GUARDIAN ZA384
ремень безопасности SEAT BELT GD348
INSTRUMENT CLUSTER КОМБИНАЦИЯ ПРИБОРОВ
ЗАЩЕЛКА КАБИНЫ РАЗБЛОКИРОВАНА CAB LATCH UNLOCKED CPL30
MC01 ВОЗДУШНЫЙ ФИЛЬТР AIR FILTR RESTRCT CE501
PATS PWR SUPPLY CRT31
PATS TX VRT07
PATS RX VRT23
EXT TEMP VE740
ANALOG GND RMC27
FUEL LEVEL GND RMC27
FUEL LEVEL RMC32
ТОРМОЗНАЯ КОЛОДКА ОСИ
1ST AXLE BRAKE PAD VMC17
2ST AXLE BRAKE PAD ZA169
LIN VHF04
KL31 #2744
KL31 #2744
AUX HEATER ZA172
ВСПОМОГАТЕЛЬНЫЙ НАГРЕВАТЕЛЬ
AUX HEATER INPUT ZA171
AUX HEATER INPUT 2 ZA171
C2 - 28 HS CAN 3 +
C2 - 12 HS CAN 3 -
C2 - 27 V CAN +
C2 - 11 V CAN -
TO VEHICLE CANBUS HIGHSPEED
MIL GND CE317
OBD/ENGINE CHECK LAMP LE423
L OIL PRESS CMC14
VLN18A_BU/WH_2TAD_0.35 14401" 1385 mm
CLN17A_BN_2TAD_0.35 14401" 1385 mm
JU5T-14A459-AA
VLN18B_BU/WH_2TAD_0.35 14A320_RHS" 250 mm
CLN17B_BN_2TAD_0.35 14A320_RHS" 250 mm
JU5T-14489-AA
C2RB05
CT546 FUNCTIONAL ILLUMINATION ZZ742 TBD-008-M RB05
SWITCH - LANE DEPARTURE WARNING SYSTEM (LDWS)
ПОЛОСА ПЕРЕКЛЮЧЕНИЯ ПРЕДУПРЕЖДЕНИЕ ОБ ОТПРАВЛЕНИИ СИСТЕМА (LDWS)
C2A199
CT547 FUNCTIONAL ILLUMINATION ZZ285 TBD-004-M A199
SWITCH - ACTIVE EMERGENCY BRAKING SYSTEM (AEBS)
АВАРИЙНЫЙ ВЫКЛЮЧАТЕЛЬ - АКТИВНЫЙ ТОРМОЗНАЯ СИСТЕМА (AEBS
VE715A_VT/WH_2TAD_0.35 14401" 2755 mm
GD214BD_BK/BU_2TAD_0.75 14401" 1545 mm
S2D214-A
A_GD214A_BK/BU_2TBD_4.0 14401" 620 mm
A_G2D214 8V5T-14463-AHA
C12-G2
EU5T-14A459-DC
C12-G1
VE715B_VT/WH_2TAD_0.75 15A808" 795 mm
GD214BC_BK/BU_2TAD_0.75 15A808" 795 mm
EU5T-14489-DB
C1MC21
LOW COOLANT LEVEL VE715 KL31 A_GD214 MC21
SENSOR - LOW COOLANT LEVEL
ДАТЧИК - НИЗКИЙ УРОВЕНЬ ОХЛАЖДАЮЩЕЙ ЖИДКОСТИ
MAH31D_VT/GY_2TAD_0.35 14401" 325 mm
MAH31A_VT/GY_2TAD_0.35 14401" 1500 mm
S2A172
MAH31C_VT/GY_2TAD_0.35 14401" 1280 mm
MAH31E_VT/GY_2TAD_0.35 14A320_LHS" 355 mm
MAH31B VT/GY 2TAD 0.35 4030 mm 14014 GZDAA
MAH30C_BN/WH_2TAD_0.35 14014" 4030 mm GZDAA
C2A277
FUNC. ILL. ZA172
OUTPUT 1 ZA171 A277
SWITCH - AUXILIARY HEATER BED (DRY)
переключатель - ВСПОМОГАТЕЛЬНЫЙ НАГРЕВАТЕЛЬ
MAH30A_BN/WH_2TAD_0.35 14401" 1425 mm
MAH32B_GY_2TAD_0.35 14401" 1385 mm
S2A170
S2A171
MAH30D_BN/WH_2TAD_0.35 14401" 1355 mm
MAH32C_GY_2TAD_0.35 14401" 1395 mm
MAH30B_BN/WH_2TAD_0.35 14014" 4080 mm GZDAE
MAH32A_GY_2TAD_0.35 14014" 4080 mm GZDAE
9U5T-14489-AC
C4A417
OUTPUT 1 ZA171
OUTPUT 2 ZA171 A417
SWITCH - AUXILIARY HEATER BED (DRY+WET)
переключатель - ВСПОМОГАТЕЛЬНЫЙ
MAH30E_BN/WH_2TAD_0.35 14401" 250 mm
MAH30G_BN/WH_2TAD_0.35 14401" 250 mm
MAH32D_GY_2TAD_0.35 14401" 210 mm
MAH30F_BN/WH_2TAD_0.35 14A320_LHS" 355 mm
MAH30H_BN/WH_2TAD_0.35 14A320_LHS" 355 mm
MAH32E_GY_2TAD_0.35 14A320_LHS" 355 mm
C2A391
FUNC. ILL. ZA172
OUTPUT 1 ZA171 A391
SWITCH - AUXILIARY HEATER IP (DRY)
C2A393
OUTPUT 1 ZA171
OUTPUT 2 ZA171 A393
SWITCH - AUXILIARY HEATER IP (DRY+WET)
переключатель - вспомогательный IP НАГРЕВАТЕЛЯ
CE317A_GY_2TAD_0.35 14401" 2755 mm
LE423A_GN/VT_2TAD_0.35 14401" 680 mm
CMC14A_BN/YE_2TAD_0.35 14401" 2755 mm
S2E423
CE317B_GY_2TAD_0.75 14398" 3175 mm
LE423B_GN/VT_2TAD_0.75 14398" 2725 mm
CMC14B_BN/YE_2TAD_0.75 14398" 3230 mm
S1E423
LE423G_GN/VT_2TAD_0.75 14398" 765 mm
C1E115-A
E115-1 O_S_RL24 CE317
O_V_RH21 LE423
O_S_RL25 CMC14 E115
МОДУЛЬ - УПРАВЛЕНИЕ ДВИГАТЕЛЕМ - ECM
MODULE - ENGINE CONTROL - ECM (VEHICLE SIDE)
VEHICLE SIDE 44
A_CPL30A_BU/BN_2TAD_0.35 14401" 2755 mm
CE501A_GY_2TAD_0.35 14401" 2755 mm
C12-F2
C12-F1
A_CPL30B_BU/BN_2TAD_0.75 14398" 3895 mm
EU5T-14A459-CC
EU5T-14489-CB
C11-Z1
C11-Z2
A_CPL30C_BU/BN_2TAD_0.75 14F502" 440 mm
B_CPL30A_BU/BN_2TAD_0.75 14F502" 1390 mm
HRN-14F502 C1PE23
HRN-14F502 C1PE31
UNLOCK CPL30 GND CPL30 PE23
UNLOCK CPL30 KL31 GD411 PE31
SWITCH - CABIN LATCH RHS
ВЫКЛЮЧАТЕЛЬ - ЗАЩЕЛКА КАБИНЫ
SWITCH - CABIN LATCH LHS
ВЫКЛЮЧАТЕЛЬ - ЗАЩЕЛКА КАБИНЫ LHS
GD464T_BK/VT_2TAD_0.75 14398" 1210 mm
GD464U_BK/VT_2TAD_0.75 14F502" 1480 mm
CE501B_GY_2TAD_0.75 14398" 3895 mm
CE501C_GY_2TAD_0.75 14F502" 1750 mm
G1D464
JU5T-14463-BZA
GD464A_BK/VT_2TBD_6.0 14398" 225 mm
S1D464
GD464Y_BK/VT_2TAD_0.75 14398" 1210 mm
GD464Z_BK/VT_2TAD_0.75 14F502" 1750 mm
TBD-026-M
TBD-026-F
HRN-14F502 C1E780
AIR INTAKE CE501 KL31 GD410 E780
ДАТЧИК - ВСАСЫВАЕМЫЙ ВОЗДУХ
SENSOR - INTAKE AIR
VMC17A_BU/OG_2TAD_0.35 14401" 2755 mm
VMC16A_YE_2TAD_0.35 14401" 2755 mm
VMC17B_BU/OG_2TAD_0.75 14398" 2790 mm FBAAL
CMC06A_BN/BU_2TAD_0.75 14398" 5600 mm FBAAL
GD410F_BK/GN_2TAD_0.75 14398" 3145 mm FBAAL
VMC16B_YE_2TAD_0.75 14398" 5725 mm DWAB2
CMC07A_BU/GN_2TAD_0.75 14398" 680 mm DWAB2 & SE_B6
GD410E_BK/GN_2TAD_0.75 14398" 1630 mm DWAB2
VMC17C_PUR_BU/OG_2TAD_0.75 2C011_FR_RHS FBAAL
CMC08B_PUR_BN/BU_2TAD_0.75 2C011_FR_RHS FBAAL
CMC06C_PUR_BN/BU_2TAD_0.75 2C011_FR_LHS 505 mm FBAAL
GD410N_PUR_BK/GN_2TAD_0.75 2C011_FR_LHS 505 mm FBAAL
VMC16C_PUR_YE_2TAD_0.75 2C011_RR_RHS FBAAL
CMC07B_PUR_BU/GN_2TAD_0.75 2C011_RR_RHS FBAAL
CMC07C_PUR_BU/GN_2TAD_0.75 2C011_RR_LHS 810 mm FBAAL
GD410P_PUR_BK/GN_2TAD_0.75 2C011_RR_LHS 810 mm FBAAL
C11-V1
C11-V2
C11-U1
C11-U2
C11-Y1
C11-Y2
C11-W1
C11-W2
FBAAL
DWAB2
C1MC08-1
C1MC08-2
C1MC06-1
C1MC06-2
C1MC09-1
C1MC09-2
C1MC07-1
C1MC07-2
CT949
CT951
CT953
CT955
POL + VMC17
POL - VDB26
POL + VDB26
KL31 (POL -) A_GD214
POL + ZA169
POL - ZA169
POL + ZA169
KL31 (POL -) A_GD214
SENSOR - PAD WEAR INDICATOR (PWI) FRONT RHS
СЕНСОРНАЯ ПАНЕЛЬ ИНДИКАТОР ИЗНОСА (PWI) ПЕРЕДНЯЯ LHS
SENSOR - PAD WEAR INDICATOR (PWI) FRONT LHS
СЕНСОРНАЯ ПАНЕЛЬ ИНДИКАТОР ИЗНОСА (PWI) ЗАДНИЙ RHS
SENSOR - PAD WEAR INDICATOR (PWI) ЗАДНИЙ LHS
СЕНСОРНАЯ ПАНЕЛЬ ИНДИКАТОР ИЗНОСА (PWI) REAR RHS
SENSOR - PAD WEAR INDICATOR (PWI) REAR LHS
HARNESS IS PROVIDED BY SUPPLIER
S1D410-A
DWAB2 & SE_B6
1985 mm 14398"
GD410A_BK/GN_2TBD_4.0
G1D410
MULTIPLEXED

REFERENCE			
PART MUST COMPLY WITH RESTRICTED SUBSTANCE MANAGEMENT STANDARD WSS-M99P9999 A1 TO SAFEGUARD HEALTH SAFETY AND THE ENVIRONMENT			
DRAFTED IN ACCORDANCE WITH FORD MOTOR COMPANY ENGINEERING CAD AND DRAFTING STANDARDS VERSION 27.0		3RD ANGLE PROJ DIMENSIONS ARE IN MILLIMETERS	
CAD TYPE X-E3	CAD LOC. TCE	CAD FILE PHJC46-70A000-A	DTM IS MASTER
OPER NO. N/A	UNIT N/A	DRAWING	SIZE A0
DESIGN sakay	DETAIL -----	TITLE: H625 - 2019 LP3 Design INSTRUMENT CLUSTER	SHT 1 OF 1
CHECKED -----	SAFETY MFG USE		
SCALE NTS	DATE 20160421	DIVISION: EESE	
		PLANT: N/A	

PRINTED COPIES ARE UNCONTROLLED

H625 2019 LP3 Design
A2.03 - RADIO (1-DIN)

LTRS	REVISIONS		
ORIGINATOR	CHECKER	ENGR APP	MATL APP

POWER DISTRIBUTION BOX
RADIO
FS102
20 A
MINI
102-1
102-2
102-3
102-4

ME03A
RADIO
C2ME03A-A
12V KL30
SBBA2
SBBA2A BN/BU 2TBD 2.5
14401 2365 mm
B_CDC77J GY/YE 2TAD 4.0
14401 260 mm
S2DC77-B
B_CDC77D GY/YE 2TBD 2.5
14401 895 mm
C22-A2
C22-A1
9U5T-14489-AC
B_CDC77C GY/YE 2TBD 2.5
15A404 2345 mm
S9DC77-B
B_CDC77A GY/YE 2TBD 2.5
15A404 200 mm
B_CDC77B GY/YE 2TBD 2.5
15A404 200 mm
B_CDC77K GY/YE 2TBD 2.5
15A404 200 mm
B_CDC77L GY/YE 2TBD 2.5
15A404 200 mm
C9DC31
12V KL30 OUTPUT
CDC77
DC31
VOLTAGE CONVERTER - 2
C1 - 19
HS CAN3 +
C1 - 30
HS CAN3 -
VDB13B BU/GY
VDB14B VT/GY
TO HS CAN3 CANBUS HIGHSPEED
SPEAKER LEFT FRONT +
VME07
SPEAKER LEFT FRONT -
RME07
VME07T WH 2TAD 0.75
14401 1031 mm
RME07T WH/BN 2TAD 0.75
14401 1046 mm
S2ME07-A
S2ME07-B
VME07D WH 2TAD 0.75
14401 660 mm
RME07D WH/BN 2TAD 0.75
14401 645 mm
C33-A2
C33-A1
VME07R WH 2TAD 0.75
14A005 1686 mm
RME07R WH/BN 2TAD 0.75
14A005 1686 mm
C35-B1
C35-A2
VME07E BK 2TAD 0.75
14A584 1036 mm
RME07E BK 2TAD 0.75
14A584 1036 mm
C5ME08-A1
SPKR LF TWT +
SPKR LF TWT -
ME08-A1
SPEAKER - TWEETER FRONT LHS
VME07B WH 2TAD 0.75
14401 660 mm
RME07B WH/BN 2TAD 0.75
14401 645 mm
VME07S WH 2TAD 0.75
14A005 1686 mm
RME07S WH/BN 2TAD 0.75
14A005 1686 mm
8V5T-14489-VB
VME07C BK 2TAD 0.75
14A584 726 mm
RME07C BK 2TAD 0.75
14A584 726 mm
C5ME07-A1
SPKR LF WFR +
VME07
SPKR LF WFR -
RME07
ME07-A1
SPEAKER - WOOFER FRONT DOOR LHS
SPEAKER RIGHT FRONT +
VME10
SPEAKER RIGHT FRONT -
RME10
VME10S WH 2TAD 0.75
14401 152 mm
RME10S WH/BN 2TAD 0.75
14401 102 mm
S2ME10-A
S2ME10-B
VME10D WH 2TAD 0.75
14401 1834 mm
RME10D WH/BN 2TAD 0.75
14401 1884 mm
C33-B2
C33-B1
VME10P WH 2TAD 0.75
14014 467 mm
RME10P WH/BN 2TAD 0.75
14014 467 mm
C36-B1
C36-A2
8V5T-14489-VB
VME10E BK 2TAD 0.75
14K138 1031 mm
RME10E BK 2TAD 0.75
14K138 1031 mm
C6ME11-A1
SPKR RF TWT +
SPKR RF TWT -
ME11-A1
SPEAKER - TWEETER FRONT RHS
VME10B WH 2TAD 0.75
14401 1834 mm
RME10B WH/BN 2TAD 0.75
14401 1884 mm
VME10T WH 2TAD 0.75
14014 467 mm
RME10T WH/BN 2TAD 0.75
14014 467 mm
9U5T-14489-AC
C36-C1
C36-C1
8V5T-14489-XB
VME10C BK 2TAD 0.75
14K138 721 mm
RME10C BK 2TAD 0.75
14K138 721 mm
C6ME10-A1
SPKR RF WFR +
SPKR RF WFR -
ME10-A1
SPEAKER - WOOFER FRONT DOOR RHS
MIC +
RMM23
MIC -
RMM23
KL31
GD284
VMM23A BN/VT 2TAD 0.35
14401 1806 mm
RMM23A WH/GN 2TAD 0.35
14401 1806 mm
GD284A BK/GY 2TBD 2.5
14401 865 mm
G2D284
C22-F2
C22-F1
JU5T-14A459-AA
VMM23G BN/VT 2TAD 0.35
15A404 2784 mm
RMM23G WH/GN 2TAD 0.35
15A404 2784 mm
C99-A1
C99-A2
VMM23B BN/VT 2TAD 0.35
15B594 1099 mm
RMM23B WH/GN 2TAD 0.35
15B594 1099 mm
HRN-15B594
C9MT06-A
HRN-15B594
MIC -
RMM23
MIC +
RMM23
MT06-A1
MICROPHONE - TELEMATICS

REFERENCE

PART MUST COMPLY WITH RESTRICTED SUBSTANCE MANAGEMENT STANDARD WSS-M99P9999 A1 TO SAFEGUARD HEALTH SAFETY AND THE ENVIRONMENT

DRAFTED IN ACCORDANCE WITH FORD MOTOR COMPANY ENGINEERING CAD AND DRAFTING STANDARDS VERSION 27.0

3RD ANGLE PROJ
DIMENSIONS ARE IN MILLIMETERS

CAD TYPE	CAD LOC.	CAD FILE	DTM
X-E3	-----	PHJC46-70A102-A	IS MASTER

OPER NO.	UNIT	DRAWING	SIZE
-----	-----		A1

DESIGN	DETAIL	TITLE:	SHT 1 OF 1
sakay	-----	H625 - 2019 LP3 Design RADIO (1-DIN)	

CHECKED	SAFETY	
-----	-----	

SCALE	DATE	DIVISION: EESE
NTS	20161214	PLANT: -----

Modified By: ABEKEL
Date Changed: 11/25/2019

H625 2019 LP3 Design
A2.03 - RADIO (2-DIN)

LTRS	REVISIONS		
ORIGINATOR	CHECKER	ENGR APP	MATL APP

POWER DISTRIBUTION BOX

RADIO
FS102
20 A
MINI

LDWS BUZZERS
FS072
3 A
MINI

24V KL.15/50 BB1_2

C2BB01
102-1 102-1
102-2 102-2
72-1 72-1
72-2 72-2

12V KL30
SBBA2
C2ME03A-A
SBBA2A BN/BU 2TBD 2.5
14401 2365 mm

B_CDC77J GY/YE 2TAD 4.0
14401 260 mm
S2DC77-B
B_CDC77D GY/YE 2TBD 2.5
14401 895 mm
C22-A2
C22-A1
9U5T-14489-AC
B_CDC77C GY/YE 2TBD 2.5
15A404 2345 mm
S9DC77-B
B_CDC77A GY/YE 2TBD 2.5
15A404 200 mm
B_CDC77B GY/YE 2TBD 2.5
15A404 200 mm
B_CDC77K GY/YE 2TBD 2.5
15A404 200 mm
B_CDC77L GY/YE 2TBD 2.5
15A404 200 mm
C9DC31
12V KL30 OUTPUT CDC77
12V KL30 OUTPUT CDC77
12V KL30 OUTPUT CDC77
12V KL30 OUTPUT CDC77
DC31
VOLTAGE CONVERTER - 2

SPEAKER LEFT FRONT + VME07
SPEAKER LEFT FRONT - RME07
VME07T WH 2TAD 0.75
14401 1031 mm
RME07T WH/BN 2TAD 0.75
14401 1046 mm
S2ME07-A
S2ME07-B
VME07D WH 2TAD 0.75
14401 660 mm
RME07D WH/BN 2TAD 0.75
14401 645 mm
VME07B WH 2TAD 0.75
14401 660 mm
RME07B WH/BN 2TAD 0.75
14401 645 mm
C33-A2
C33-A1
VME07R WH 2TAD 0.75
14A005 1686 mm
RME07R WH/BN 2TAD 0.75
14A005 1686 mm
VME07S WH 2TAD 0.75
14A005 1686 mm
RME07S WH/BN 2TAD 0.75
14A005 1686 mm
C35-B1
C35-A2
8V5T-14489-VB
VME07E BK 2TAD 0.75
14A584 1036 mm
RME07E BK 2TAD 0.75
14A584 1036 mm
VME07C BK 2TAD 0.75
14A584 726 mm
RME07C BK 2TAD 0.75
14A584 726 mm
C5ME08-A1
SPKR LF TWT + VME07
SPKR LF TWT - RME07
ME08-A1
SPEAKER - TWEETER FRONT LHS
C5ME07-A1
SPKR LF WFR + VME07
SPKR LF WFR - RME07
ME07-A1
SPEAKER - WOOFER FRONT DOOR LHS

SPEAKER RIGHT FRONT + VME10
SPEAKER RIGHT FRONT - RME10
VME10S WH 2TAD 0.75
14401 152 mm
RME10S WH/BN 2TAD 0.75
14401 102 mm
S2ME10-A
S2ME10-B
VME10D WH 2TAD 0.75
14401 1834 mm
RME10D WH/BN 2TAD 0.75
14401 1884 mm
VME10B WH 2TAD 0.75
14401 1834 mm
RME10B WH/BN 2TAD 0.75
14401 1884 mm
C33-B2
C33-B1
VME10P WH 2TAD 0.75
14014 467 mm
RME10P WH/BN 2TAD 0.75
14014 467 mm
VME10T WH 2TAD 0.75
14014 467 mm
RME10T WH/BN 2TAD 0.75
14014 467 mm
C36-B1
C36-A2
C36-C1
8V5T-14489-VB
9U5T-14489-AC
8V5T-14489-XB
VME10E BK 2TAD 0.75
14K138 1031 mm
RME10E BK 2TAD 0.75
14K138 1031 mm
VME10C BK 2TAD 0.75
14K138 721 mm
RME10C BK 2TAD 0.75
14K138 721 mm
C6ME11-A1
SPKR RF TWT + VME10
SPKR RF TWT - RME10
ME11-A1
SPEAKER - TWEETER FRONT RHS
C6ME10-A1
SPKR RF WFR + VME10
SPKR RF WFR - RME10
M
SPEAKER - WOOFER FRONT DOOR RHS

HS CAN 3 + VDB13
HS CAN 3 - VDB14
VDB13B BU/GY TO HS CAN3 CANBUS HIGHSPEED
VDB14B VT/GY TO HS CAN3 CANBUS HIGHSPEED

MIC + RMM23
MIC - RMM23
VMM23A BN/VT 2TAD 0.35
14401 1806 mm
RMM23A WH/GN 2TAD 0.35
14401 1806 mm
S2DMM23-C
Wires:SP1
DMM23B SCRN 3XAE 0.35
14401 1740 mm
C22-F2
C22-F1
JU5T-14A459-AA
Wires:SP1
VMM23G BN/VT 2TAD 0.35
15A404 2784 mm
RMM23G WH/GN 2TAD 0.35
15A404 2784 mm
DMM23D BK 2TAD 0.35
15A404 150 mm
S9DMM23-F
DMM23E SCRN 3XAE 0.35
15A404 2450 mm
Wires:SP3
S9DMM23-A
DMM23F BK 2TAD 0.35
15A404 160 mm
Wires:SP3
C99-A1
C99-A2
VMM23B BN/VT 2TAD 0.35
15B594 1099 mm
RMM23B WH/GN 2TAD 0.35
15B594 1099 mm
DMM23G BK 2TAD 0.35
15B594 150 mm
S9DMM23-E
Wires:SP2
DMM23H SCRN 3XAE 0.35
15B594 890 mm
S9DMM23-D
HRN-15B594
C9MT06-A
MT06-A1
MIC - RMM23
MIC + RMM23
MICROPHONE - TELEMATICS

LEFT REAR SPEAKER + VME09
LEFT REAR SPEAKER - RME09
VME09A WH/GN 2TAD 0.75
14401 1859 mm
RME09A BN/YE 2TAD 0.75
14401 1859 mm
C22-A2
C22-A1
9U5T-14489-AC
VME09B WH/GN 2TAD 0.75
15A404 6192 mm IDBAX
RME09B BN/YE 2TAD 0.75
15A404 6192 mm IDBAX
C9ME09
VME09
RME09
A236
SPEAKER - LEFT REAR (WOOFER)

RIGHT REAR SPEAKER + VME12
RIGHT REAR SPEAKER - RME12
VME12A BN/WH 2TAD 0.75
14401 1859 mm
RME12A BN/BU 2TAD 0.75
14401 1859 mm
VME12B BN/WH 2TAD 0.75
15A404 4978 mm IDBAX
RME12B BN/BU 2TAD 0.75
15A404 4978 mm IDBAX
C9ME12
A237
VME12
RME12
SPEAKER - RIGHT REAR (WOOFER)

KL31
GD284
GD284A BK/GY 2TBD 2.5
14401 865 mm
DMM23A BK 2TAD 0.75
14401 50 mm
G2D284
ME03A
RADIO
(STANDALONE TOUCH RADIO)

REFERENCE

PART MUST COMPLY WITH RESTRICTED SUBSTANCE MANAGEMENT STANDARD WSS-M99P9999 A1 TO SAFEGUARD HEALTH SAFETY AND THE ENVIRONMENT

DRAFTED IN ACCORDANCE WITH FORD MOTOR COMPANY ENGINEERING CAD AND DRAFTING STANDARDS VERSION 27.0

3RD ANGLE PROJ
DIMENSIONS ARE IN MILLIMETERS

CAD TYPE	CAD LOC.	CAD FILE	DTM
X-E3	-----	PHJC46-70A102-B	IS MASTER

OPER NO.	UNIT	DRAWING	SIZE
-----	-----		A1

DESIGN	DETAIL	TITLE:	SHT 1 OF 1
sakay	-----	H625 - 2019 LP3 Design RADIO (2-DIN)	

CHECKED	SAFETY	
-----	-----	

SCALE	DATE	DIVISION: EESE
NTS	20160120	PLANT: -----

Modified By: NYAYLA1
Date Changed: 12/5/2019

LTRS	REVISIONS		
ORIGINATOR	CHECKER	ENGR APP	MATL APP

H625 2019 LP3 Design
B2.04 AUTOMATIC TRANSMISSION

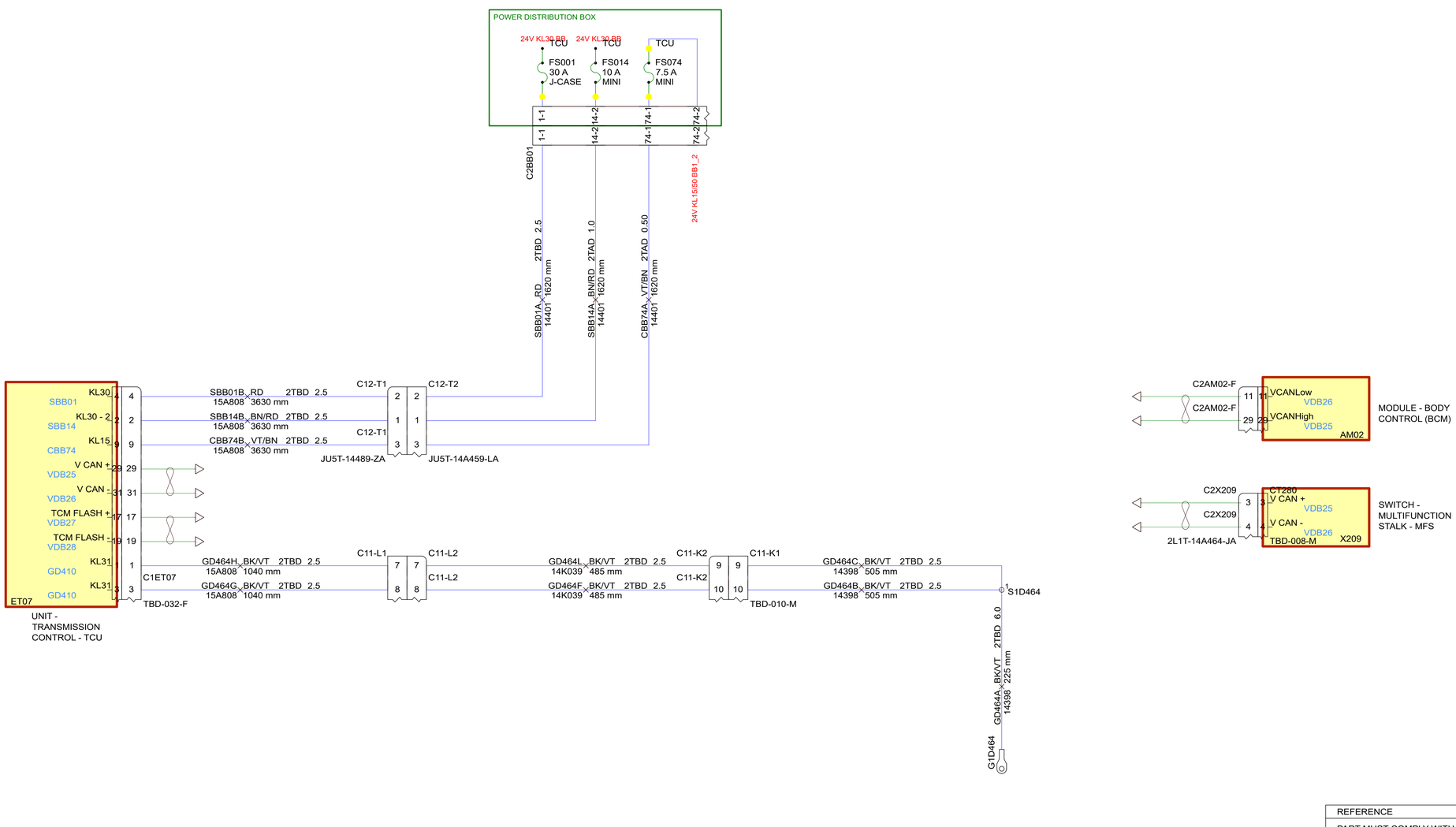

REFERENCE			
PART MUST COMPLY WITH RESTRICTED SUBSTANCE MANAGEMENT STANDARD WSS-M99P9999 A1 TO SAFEGUARD HEALTH SAFETY AND THE ENVIRONMENT			
DRAFTED IN ACCORDANCE WITH FORD MOTOR COMPANY ENGINEERING CAD AND DRAFTING STANDARDS VERSION 27.0		3RD ANGLE PROJ DIMENSIONS ARE IN MILLIMETERS	
CAD TYPE X-E3	CAD LOC. -----	CAD FILE PHJC46-70B023-A	DTM IS MASTER
OPER NO. -----	UNIT -----	DRAWING	SIZE A1
DESIGN fkarade3	DETAIL -----	TITLE: H625 - 2019 LP3 Design AUTOMATIC TRANSMISSION	SHT 1 OF 1
CHECKED -----	SAFETY -----		
SCALE NTS	DATE 20150807	DIVISION: EESE	
		PLANT: -----	

Modified By: ABEKEL
Data Changed: 11/26/2019

H625 2019 LP3 Design
B3.03 - ENGINE CONTROL MODULE

LTRS	REVISIONS		
ORIGINATOR	CHECKER	ENGR APP	MATL APP

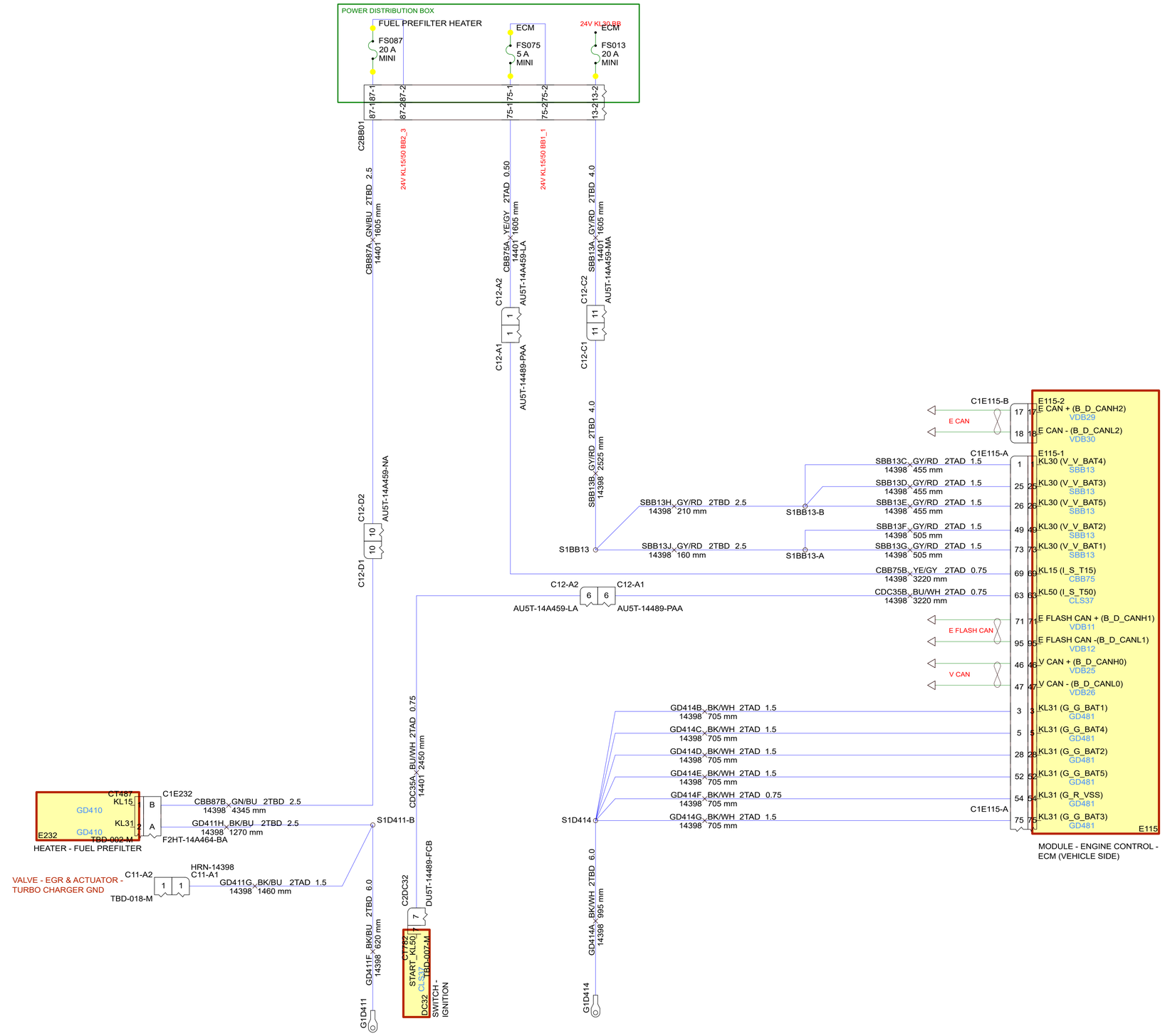

REFERENCE			
PART MUST COMPLY WITH RESTRICTED SUBSTANCE MANAGEMENT STANDARD WSS-M99P9999 A1 TO SAFEGUARD HEALTH SAFETY AND THE ENVIRONMENT			
DRAFTED IN ACCORDANCE WITH FORD MOTOR COMPANY ENGINEERING CAD AND DRAFTING STANDARDS VERSION 27.0			3RD ANGLE PROJ DIMENSIONS ARE IN MILLIMETERS
CAD TYPE X-E3	CAD LOC. TCE	CAD FILE PHJC46-70B041-A1	DTM IS MASTER
OPER NO. N/A	UNIT N/A	DRAWING	SIZE A1
DESIGN fkarade3	DETAIL -----	TITLE: H625 - 2019 LP3 Design ENGINE CONTROL SYSTEM	SHT 1 OF 1
CHECKED -----	SAFETY MFG USE		
SCALE NTS	DATE 20160609	DIVISION: EESE	
		PLANT: N/A	

Modified By: ABEKEL
Date Changed: 11/2/2019

H625 2019 LP3 Design
B3.03 - ENGINE CONTROL MODULE (VEHICLE SIDE)

LTRS	REVISIONS		
ORIGINATOR	CHECKER	ENGR APP	MATL APP

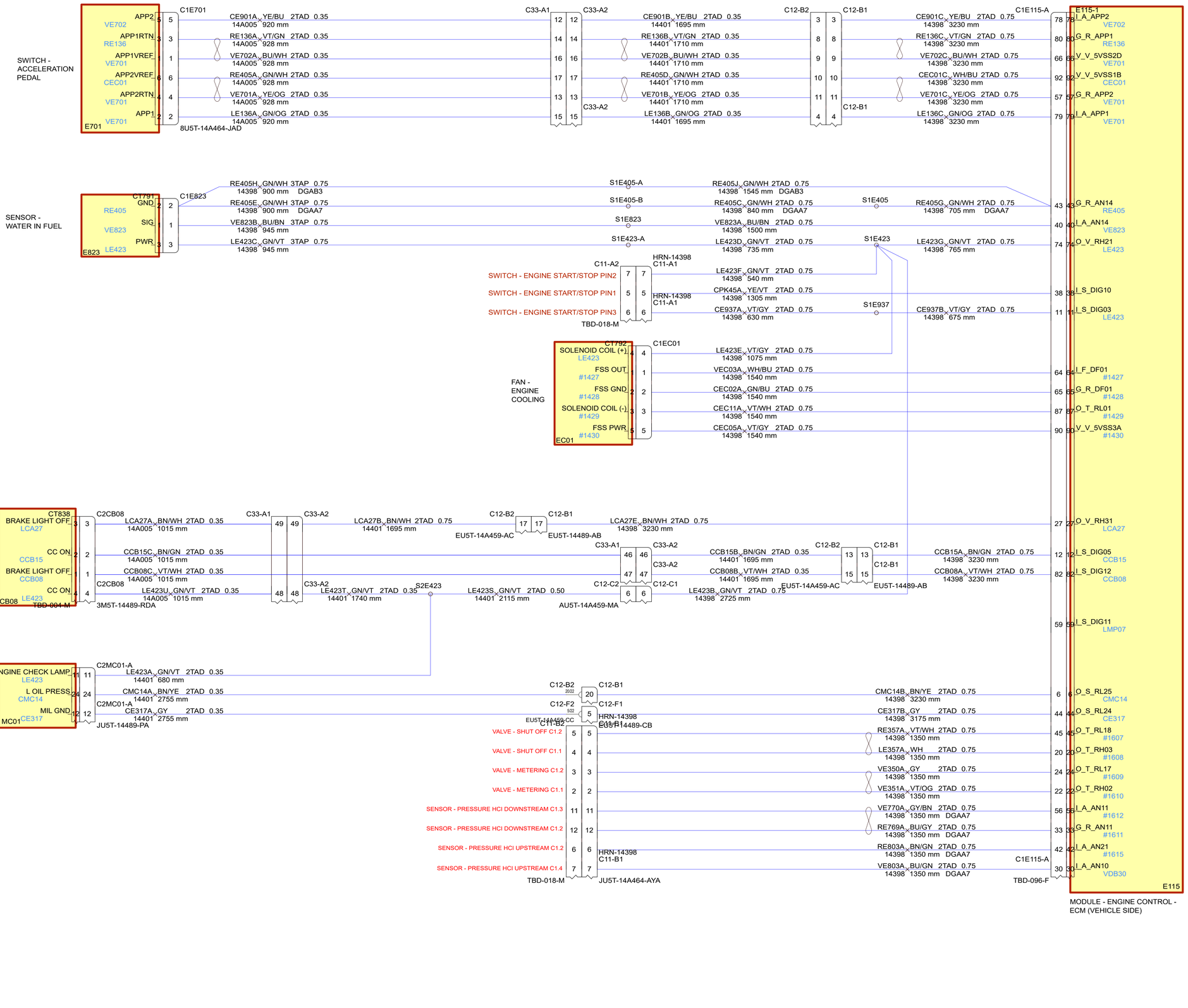

REFERENCE			
PART MUST COMPLY WITH RESTRICTED SUBSTANCE MANAGEMENT STANDARD WSS-M99P9999 A1 TO SAFEGUARD HEALTH SAFETY AND THE ENVIRONMENT			
DRAFTED IN ACCORDANCE WITH FORD MOTOR COMPANY ENGINEERING CAD AND DRAFTING STANDARDS VERSION 27.0		3RD ANGLE PROJ DIMENSIONS ARE IN MILLIMETERS	
CAD TYPE X-E3	CAD LOC. TCE	CAD FILE PHJC46-70B041-A2	DTM IS MASTER
OPER NO. N/A	UNIT N/A	DRAWING	SIZE A1
DESIGN fkarade3	DETAIL -----	TITLE: H625 - 2019 LP3 Design ENGINE CONTROL SYSTEM (VEHICLE SIDE)	SHT 1 OF 1
CHECKED -----	SAFETY MFG USE		
SCALE NTS	DATE 20160610	DIVISION: EESE	
		PLANT: N/A	

Modified By: NYAYLA1
Date Changed: 12/5/2019

H625 2019 LP3 Design
B4.03 SELECTIVE CATALYTIC REDUCTION

LTRS	REVISIONS		
ORIGINATOR	CHECKER	ENGR APP	MATL APP

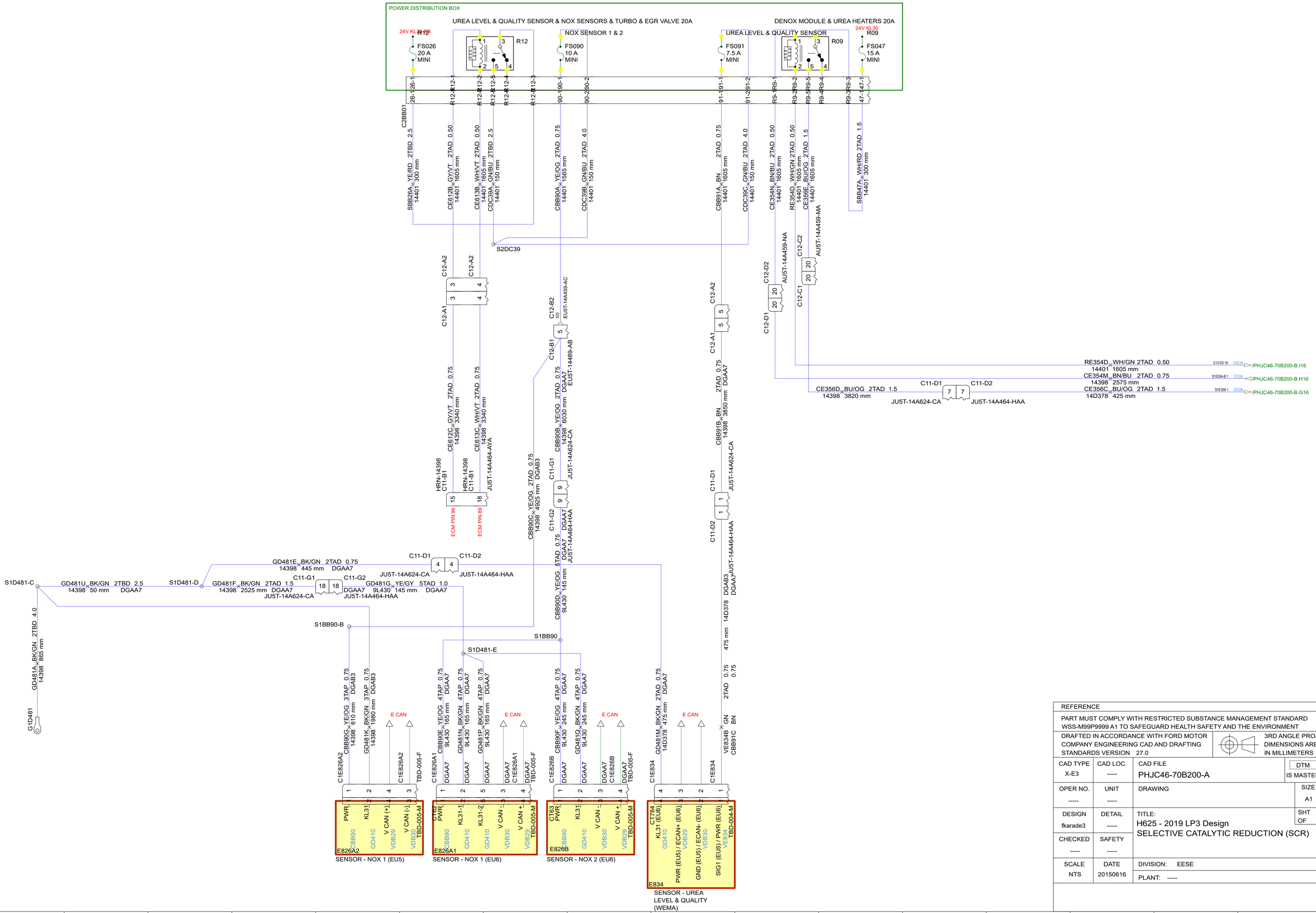

REFERENCE			
PART MUST COMPLY WITH RESTRICTED SUBSTANCE MANAGEMENT STANDARD WSS-M99P9999 A1 TO SAFEGUARD HEALTH SAFETY AND THE ENVIRONMENT			
DRAFTED IN ACCORDANCE WITH FORD MOTOR COMPANY ENGINEERING CAD AND DRAFTING STANDARDS VERSION 27.0		3RD ANGLE PROJ DIMENSIONS ARE IN MILLIMETERS	
CAD TYPE X-E3	CAD LOC. -----	CAD FILE PHJC46-70B200-A	DTM IS MASTER
OPER NO. -----	UNIT -----	DRAWING	SIZE A1
DESIGN fkarade3	DETAIL -----	TITLE: H625 - 2019 LP3 Design SELECTIVE CATALYTIC REDUCTION (SCR)	SHT 1 OF 1
CHECKED -----	SAFETY -----		
SCALE NTS	DATE 20150616	DIVISION: EESE	
		PLANT: -----	

Modified By: IVYVLA1
Date Changed: 1/23/2019

H625 2019 LP3 Design
B4.03 SELECTIVE CATALYTIC REDUCTION

LTRS	REVISIONS		
ORIGINATOR	CHECKER	ENGR APP	MATL APP

MODULE - DOSING (EU5)
MODULE - DOSING (EU6)
SENSOR - DIFFERENTIAL PRESSURE
/PHJC46-70B200-A.G2
S1E354-A
S1E356
S1E405
S1E423
S1E354-B
S1E719
S1E771-A
S1E771-B
JU5T-14A624-ZA
JU5T-14A624-AAA
JU5T-14A624-CA
JU5T-14A464-HAA
JU5T-14N003-AGA
AU5T-14A450-NA
JU5T-14A464-AYA
9L3T-14A464-BA
TBD-002-M
TBD-018-M
TBD-004-M
HEATER - HOSE 2
HEATER - HOSE 1
VALVE - TANK HEATING
MODULE - DENOXTRONIC CONTROL
SENSOR - UREA LEVEL & QUALITY (WEMA)
SENSOR - EGT 3
SENSOR - EGT 2
SENSOR - EGT 1
SENSOR - PRESSURE HC1 UPSTREAM C11
SENSOR - EGT 3
MODULE - ENGINE CONTROL - ECM (VEHICLE SIDE)

REFERENCE
PART MUST COMPLY WITH RESTRICTED SUBSTANCE MANAGEMENT STANDARD WSS-M99P9999 A1 TO SAFEGUARD HEALTH SAFETY AND THE ENVIRONMENT
DRAFTED IN ACCORDANCE WITH FORD MOTOR COMPANY ENGINEERING CAD AND DRAFTING STANDARDS VERSION 27.0 — 3RD ANGLE PROJ, DIMENSIONS ARE IN MILLIMETERS

CAD TYPE	CAD LOC.	CAD FILE	DTM
X-E3	-----	PHJC46-70B200-B	IS MASTER
OPER NO.	UNIT	DRAWING	SIZE
-----	-----		A1
DESIGN	DETAIL	TITLE: H625 - 2019 LP3 Design SELECTIVE CATALYTIC REDUCTION (SCR)	SHT 1 OF 1
fkarade3	-----		
CHECKED	SAFETY		
-----	-----		
SCALE	DATE	DIVISION: EESE	
NTS	20160115	PLANT: -----	

Modified By: IVAYLA1
Last Changed: 12/5/2019

H625 2019 LP3 Design
B4.02 DEPARTRONIC SYSTEM

LTRS	REVISIONS		
ORIGINATOR	CHECKER	ENGR APP	MATL APP

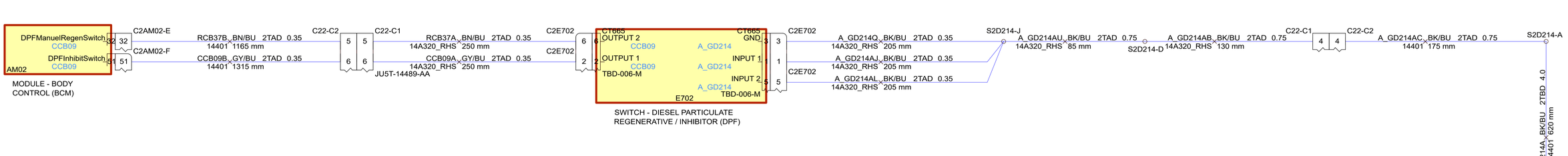

REFERENCE			
PART MUST COMPLY WITH RESTRICTED SUBSTANCE MANAGEMENT STANDARD WSS-M99P9999 A1 TO SAFEGUARD HEALTH SAFETY AND THE ENVIRONMENT			
DRAFTED IN ACCORDANCE WITH FORD MOTOR COMPANY ENGINEERING CAD AND DRAFTING STANDARDS VERSION 27.0			3RD ANGLE PROJ DIMENSIONS ARE IN MILLIMETERS
CAD TYPE X-E3	CAD LOC. TCE	CAD FILE PHJC46-70B201-A	DTM IS MASTER
OPER NO. N/A	UNIT N/A	DRAWING	SIZE A1
DESIGN fkarade3	DETAIL -----	TITLE: H625 - 2019 LP3 Design DIESEL PARTICULATE FILTER (DPF)	SHT 1 OF 1
CHECKED -----	SAFETY MFG USE		
SCALE NTS	DATE 20160608	DIVISION: EESE	
		PLANT: N/A	

Modified By: ABEKEL
Date Changed: 11/26/2019

LTRS	REVISIONS			
ORIGINATOR	CHECKER	ENGR APP	MATL APP	

H625 2019 LP3 Design
C1.01 POWER DISTRIBUTION BOX

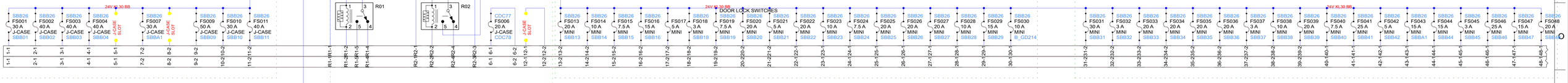

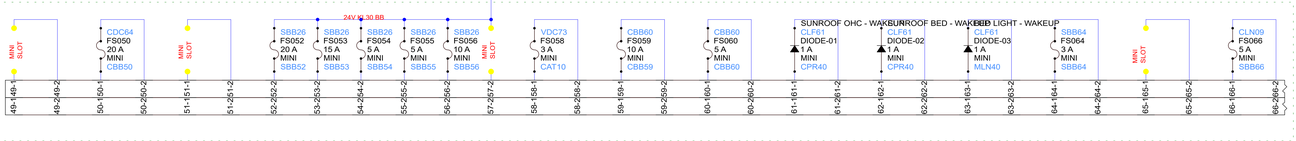

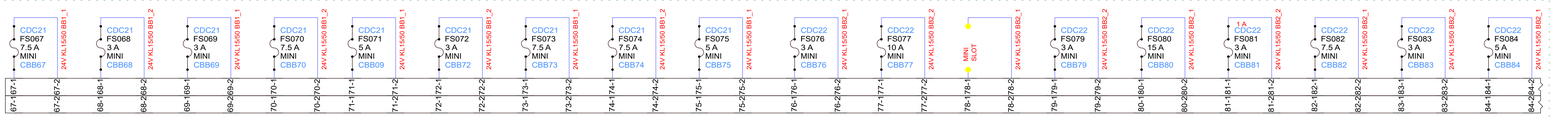

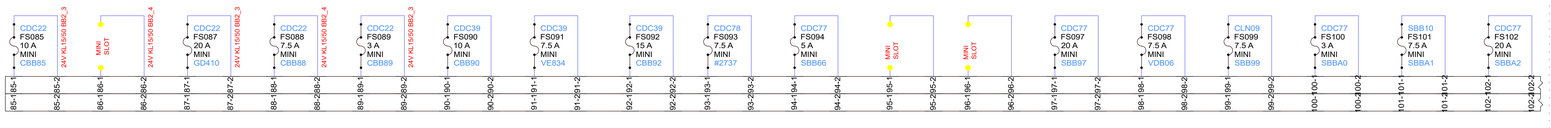

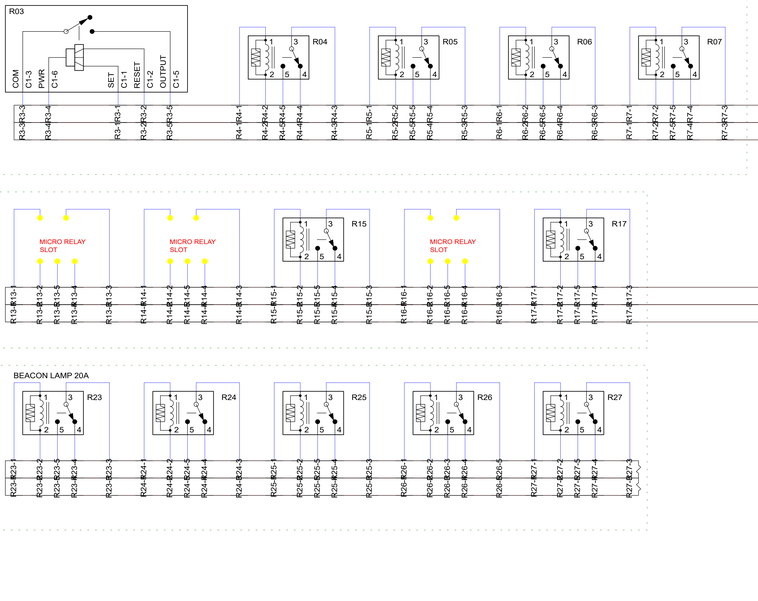

REFERENCE			
PART MUST COMPLY WITH RESTRICTED SUBSTANCE MANAGEMENT STANDARD WSS-M99P9999 A1 TO SAFEGUARD HEALTH SAFETY AND THE ENVIRONMENT			
DRAFTED IN ACCORDANCE WITH FORD MOTOR COMPANY ENGINEERING CAD AND DRAFTING STANDARDS VERSION 28.1		3RD ANGLE PROJ DIMENSIONS ARE IN MILLIMETERS	
CAD TYPE X-E3	CAD LOC. TCE	CAD FILE PHJC46-70C000-A1	DTM IS MASTER
OPER NO. N/A	UNIT N/A	DRAWING	SIZE A0
DESIGN fkarade3	DETAIL -----	TITLE: H625 - 2019 LP3 Design POWER DISTRIBUTION BOX	SHT 1 OF 1
CHECKED -----	SAFETY MFG USE		
SCALE NTS	DATE 20160812	DIVISION: EESE	
		PLANT: N/A	

PRINTED COPIES ARE UNCONTROLLED

H625 2019 LP3 Design
C1.01 POWER DISTRIBUTION BOX

LTRS	REVISIONS
ORIGINATOR	CHECKER / ENGR APP / MATL APP

POWER DISTRIBUTION BOX

	TCU	TCU	INTARDER	FORWARD LOOKING CAMERA	BCM	BCM	BCM	BCM	BCM	BCM	BCM	OBD1 & OBD2	PCCM	DRY TYPE FFH	WET TYPE FFH	AFTERMARKET CHASSIS & ROOF	AFTERMARKET CABIN & GEMS (ACM-E)	REFRIGERATOR	TPMS	CLUSTER
	24V KL30 BB	24V KL30 BB	24V KL30 BB	24V KL30 BB	24V KL30 BB	24V KL30 BB	24V KL30 BB	24V KL30 BB	24V KL30 BB	24V KL30 BB	24V KL30 BB	24V KL30 BB	24V KL30 BB	24V KL30 BB	24V KL30 BB	24V KL30 BB	24V KL30 BB	24V KL30 BB	24V KL30 BB	24V KL30 BB
	FS001 30 A J-CASE	FS014 10 A MINI	FS015 7.5 A MINI	FS018 3 A MINI	FS033 20 A MINI	FS034 20 A MINI	FS035 20 A MINI	FS036 20 A MINI	FS039 20 A MINI	FS025 20 A MINI	FS022 20 A MINI	FS020 20 A MINI	FS038 10 A MINI	FS042 5 A MINI	FS030 10 A MINI	FS027 20 A MINI	FS048 20 A MINI	FS052 20 A MINI	FS053 15 A MINI	FS024 7.5 A MINI	FS054 5 A MINI	FS056 10 A MINI
	1-1	14-214-2	15-215-2	18-218-2	33-233-2	34-234-2	35-235-2	36-236-2	39-239-2	25-125-1	22-122-1	20-220-2	38-238-2	42-142-1	30-130-1	27-127-1	48-148-1	52-252-2	53-253-2	24-124-1	54-254-2	56-256-2

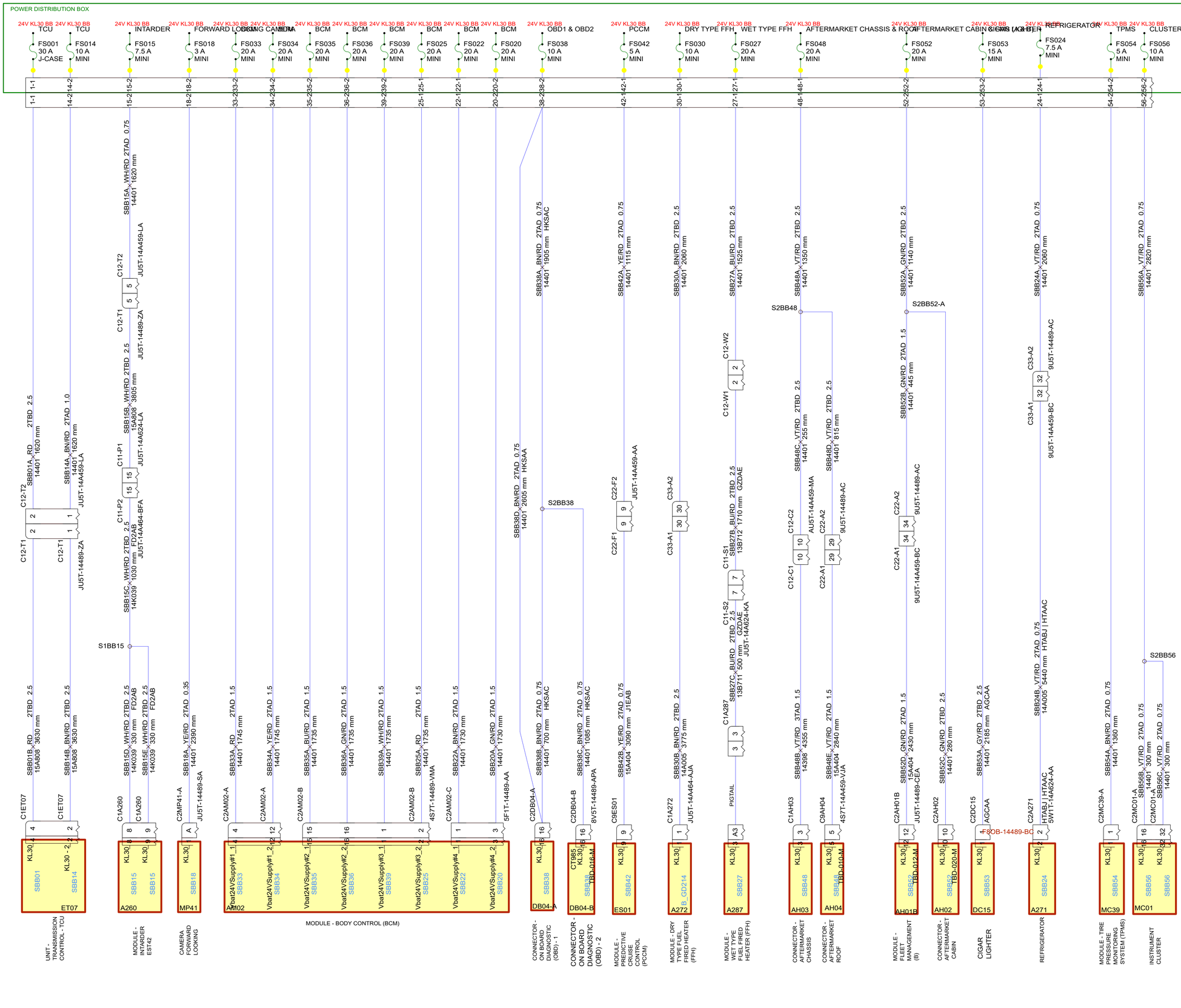
SBB01A RD 2TBD 2.5 15A808 1620 mm
SBB14A BN/RD 2TBD 2.5 15A808 1620 mm
SBB15A WH/RD 2TAD 0.75 14401 1620 mm
SBB15B WH/RD 2TBD 2.5 15A808 3805 mm
SBB15C WH/RD 2TBD 2.5 14K039 1030 mm FD2AB
SBB15D WH/RD 2TBD 2.5 14K039 330 mm FD2AB
SBB15E WH/RD 2TBD 2.5 14K039 330 mm FD2AB
SBB18A YE/RD 2TAD 0.35 14401 2390 mm
SBB33A RD 2TAD 1.5 14401 1745 mm
SBB34A YE/RD 2TAD 1.5 14401 1745 mm
SBB35A BU/RD 2TAD 1.5 14401 1735 mm
SBB36A GN/RD 2TAD 1.5 14401 1735 mm
SBB39A WH/RD 2TAD 1.5 14401 1735 mm
SBB25A RD 2TAD 1.5 14401 1735 mm
SBB22A BN/RD 2TAD 1.5 14401 1730 mm
SBB20A GN/RD 2TAD 1.5 14401 1730 mm
SBB38A BN/RD 2TAD 0.75 14401 1905 mm HKSAC
SBB38B BN/RD 2TAD 0.75 14401 700 mm HKSAC
SBB38D BN/RD 2TAD 0.75 14401 2605 mm HKSAA
SBB42A YE/RD 2TAD 0.75 14401 1115 mm
SBB38C BN/RD 2TBD 2.5 14401 1085 mm HKSAC
SBB42B YE/RD 2TAD 0.75 15A404 3090 mm J1EAB
SBB30A BN/RD 2TBD 2.5 14401 2060 mm
SBB30B BN/RD 2TBD 2.5 14A005 3775 mm
SBB27A BU/RD 2TBD 2.5 14401 1525 mm
SBB27B BU/RD 2TBD 2.5 13B712 1710 mm GZDAE
SBB27C BU/RD 2TBD 2.5 13B711 500 mm GZDAE
SBB48A VT/RD 2TBD 2.5 14401 1350 mm
SBB48B VT/RD 3TAD 1.5 14398 4355 mm
SBB48C VT/RD 2TBD 2.5 14401 255 mm
SBB48D VT/RD 2TBD 2.5 14401 815 mm
SBB48E VT/RD 2TAD 1.5 15A404 2840 mm
SBB52A GN/RD 2TBD 2.5 14401 1140 mm
SBB52B GN/RD 2TAD 1.5 14401 445 mm
SBB52D GN/RD 2TAD 1.5 15A404 2430 mm
SBB52C GN/RD 2TBD 2.5 14401 280 mm
SBB53A GY/RD 2TBD 2.5 14401 2185 mm AGCAA
SBB24A VT/RD 2TAD 0.75 14401 2060 mm
SBB24B VT/RD 2TAD 0.75 14A005 5440 mm HTABJ | HTFAAC
SBB54A BN/RD 2TAD 0.75 14401 1360 mm
SBB56A VT/RD 2TAD 0.75 14401 2820 mm
SBB56B VT/RD 2TAD 0.75 14401 300 mm
SBB56C VT/RD 2TAD 0.75 14401 300 mm
S1BB15
S2BB38
S2BB48
S2BB52-A
S2BB56
C12-T2
C12-T1
C11-P1
C11-P2
C12-T1
C12-T2
C12-W1
C12-W2
C11-S1
C11-S2
C12-C1
C12-C2
C22-A1
C22-A2
C33-A1
C33-A2
C22-F1
C22-F2
JU5T-14A459-LA
JU5T-14489-ZA
JU5T-14A464-BFA
JU5T-14A459-AA
JU5T-14A459-MA
JU5T-14489-AC
JU5T-14A459-BC
JU5T-14489-AC
JU5T-14A624-LA
JU5T-14A459-BC
JU5T-14489-AC
JU5T-14A459-AA
JU5T-14A464-AJA
JU5T-14A824-KA
JU5T-14A459-MA
JU5T-14A459-BC
JU5T-14489-AC
JU5T-14489-BC
JU5T-14A459-AA
JU5T-14A459-BC
JU5T-14489-AC
JU5T-14489-BC
JU5T-14A624-AAA
JU5T-14A459-AA
JU5T-14A459-BC
JU5T-14489-AC
JU5T-14489-BC

H625 2019 LP3 Design
C1.01 POWER DISTRIBUTION BOX

LTRS	REVISIONS		
ORIGINATOR	CHECKER	ENGR APP	MATL APP

POWER DISTRIBUTION BOX

24V KL30 BB
C2BB01_BOX
FS037 3 A MINI
FS045 3 A MINI
R07
FS013 20 A MINI
FS021 5 A MINI
FS031 30 A MINI
FS032 3 A MINI
FS044 15 A MINI
FS055 5 A MINI
FS066 5 A MINI

C2BB01: 37-237-2, 45-145-1, R7-1R7-1, R7-2R7-2, R7-5R7-5, R7-3R7-3, 13-213-2, 21-221-2, 31-231-2, 32-232-2, 44-144-1, 55-255-2, 66-166-1, 66-266-2

GD287E 14401 450 mm BK/VT 2TAD 0.50 — See Grounding Strategy - IP — S2D287-C

LE423Q 14401 2440 mm GN/VT 2TAD 0.50

SBB13A 14401 1605 mm GY/RD 2TBD 4.0

SBB31A 14401 1605 mm WH/RD 2TBD 4.0

SBB44A 14401 1370 mm GN/RD 2TAD 1.5

SBB66A 14401 1155 mm YE/RD 2TAD 0.75 — 12V BATTERY SAVER CONV.1

SBB45A 14401 1000 mm GY/RD 2TAD 0.75 — S2BB45

C33-A1 48 48 C33-A2 — LE423T 14401 1740 mm GN/VT 2TAD 0.35 — S2E423

LE423S 14401 2115 mm GN/VT 2TAD 0.50

CE937D 14401 1565 mm VT/GY 2TAD 0.50

CLS44A 14401 1160 mm VT/BN 2TAD 0.75

C12-C2 6 6 — AU5T-14A459-MA — C12-C1 11 11

C12-D2 11 11 — AU5T-14A459-NA — C12-D1 11 11

S2BB44

SBB44B 14401 235 mm GN/RD 2TAD 1.5

SBB44D 14401 235 mm GN/RD 2TAD 1.5

C99-A1 41 41 — C99-A2 — SBB66G 15B594 1415 mm YE/RD 2TAD 0.75

SBB66F 15A404 3110 mm YE/RD 2TAD 0.75

C22-A2 39 39 — C22-A1 — SBB66B 15A404 3055 mm YE/RD 2TAD 0.75 — 9U5T-14489-AC

C99-A1 11 11 — C99-A2 — SBB45O 15A404 2635 mm GY/RD 2TAD 0.50

SBB45C 14401 155 mm GY/RD 2TAD 0.50

C22-A2 49 49 — C22-A1 — 9U5T-14489-AC

SBB45E 15B594 940 mm GY/RD 2TAD 0.50

C33-B2 26 26 — C33-B1 — SBB45D 14014 3550 mm GY/RD 2TAD 0.50 — 9U5T-14489-AC

C9A170 14401 0.35 — JU5T-14489-ATA — SBB45AA 15B594 145 mm GY/RD 2TAD 0.35

C9T398 INPUT 1 A170 — SBB45 — TBD-006-M — SWITCH - AJAR ON/OFF OHC

SBB45B 14401 430 mm GY/RD 2TAD 0.35

SBB45W 14014 510 mm GY/RD 2TAD 0.35 — JU5T-14489-BAA

SBB45G 14014 480 mm GY/RD 2TAD 0.35

SBB45H 14014 480 mm GY/RD 2TAD 0.35 — JU5T-14489-AYA

SBB45J 14014 470 mm GY/RD 2TAD 0.35

SBB45K 14014 470 mm GY/RD 2TAD 0.35 — JU5T-14489-AXA

SBB45T 15B594 150 mm GY/RD 2TAD 0.35

SBB45U 15B594 150 mm GY/RD 2TAD 0.35 — JU5T-14489-BAA

SBB45L 15B594 130 mm GY/RD 2TAD 0.35

SBB45M 15B594 130 mm GY/RD 2TAD 0.35

SBB45R 15B594 145 mm GY/RD 2TAD 0.35

SBB45S 15B594 145 mm GY/RD 2TAD 0.35

S4BB45 — S9BB45

C2X209 KL30 5 — SBB37 — X209 — 2L1T-14A464-JA — SBB37A 14401 3225 mm GY/RD 2TAD 0.35 — SWITCH - MULTIFUNCTION STALK - MFS

C2A186 INPUT 2 1 — SBB45 — A186 — JU5T-14489-BAA — SWITCH - BED LIGHT & GLOBAL OFF BED

C2A185 INPUT 1 1 — INPUT 2 5 — SBB45 — A185 — JU5T-14489-AYA — SWITCH - DOME & AMBIENT LAMPS BED

C4PR40B INPUT 1 1 — INPUT 2 5 — SBB45 — PR40B — JU5T-14489-AXA — SWITCH - SUNROOF BED

C9A187 INPUT 1 1 — INPUT 2 5 — SBB45 — A187 — JU5T-14489-BAA — SWITCH - DOME & AMBIENT LAMPS OHC

C9PR40-A INPUT 1 1 — INPUT 2 5 — SBB45 — PR40A — SWITCH - SUNROOF OHC

C9A292 INPUT 1 1 — INPUT 2 5 — SBB45 — A292 — SWITCH - SUNBLIND

C2CB08 CC ON 4 — LE423 — CB08 — LE423U 14A005 1015 mm GN/VT 2TAD 0.35 — 3M5T-14489-RDA — SWITCH - BRAKE PEDAL

C2MC01-A INPUT 11 — LE423 — MC01 — LE423A 14401 680 mm GN/VT 2TAD 0.35 — JU5T-14489-PA — ENGINE CHECK LAMP — INSTRUMENT CLUSTER

C1AH03 KL30 12 — ZA340 — AH03 — CLS44E 14398 4355 mm VT/BN 2TAD 0.75 — CONNECTOR - AFTERMARKET CHASSIS

C2AH02 KL30 19 — ZA340 — TBD-020-M — AH02 — CLS44D 14401 260 mm VT/BN 2TAD 0.75 — AU5T-14A459-PA — CONNECTOR - AFTERMARKET CABIN

S2LS44 Splice-1

C12-C2 15 15 — AU5T-14A459-MA — C12-C1 15 15

CLS44C 14401 1075 mm VT/BN 2TAD 0.50

S1BB13

S1BB13-B — S1BB13-A

C1E115-A KL30 74 — LE423 — O_V_RH21 — E115 — MODULE - ENGINE CONTROL - ECM (VEHICLE SIDE)

LE423G 14398 765 mm GN/VT 2TAD 0.75 — S1E423

CE937B 14398 675 mm VT/GY 2TAD 0.75 — S1E937

LE423B 14398 2725 mm GN/VT 2TAD 0.75

CE937C 14398 2675 mm VT/GY 2TAD 0.75

SBB13C 14398 455 mm GY/RD 2TAD 1.5

SBB13D 14398 455 mm GY/RD 2TAD 1.5

SBB13E 14398 455 mm GY/RD 2TAD 1.5

SBB13F 14398 505 mm GY/RD 2TAD 1.5

SBB13G 14398 505 mm GY/RD 2TAD 1.5

SBB13H 14398 210 mm GY/RD 2TBD 2.5

SBB13J 14398 160 mm GY/RD 2TBD 2.5

SBB13B 14398 2525 mm GY/RD 2TBD 4.0

SBB21B 14398 5480 mm GY/RD 2TAD 0.75

SBB21A 14401 1565 mm GY/RD 2TAD 0.75

C12-B1 12 12 — EU5T-14489-AB — C12-B2 — EU5T-14A459-AC

C1A402 KL30 7 — SBB21 — A402 — UNIT - ELECTRONIC AIR PROCESSING - E-APU

C12-A1 10 10 — AU5T-14A459-LA — C12-A2

AU5T-14489-PAA

SBB44C 14398 2395 mm GN/RD 2TAD 1.5

SBB44E 14398 2395 mm GN/RD 2TAD 1.5

C11-Z1 1 1 — TBD-026-M — C11-Z2 — TBD-026-F

HRN-14F502 C1AT23-A KL30 1 — SBB31 — AT23-A — CONNECTOR - TRAILER 7-PIN ISO 7638

SBB31B 14398 3880 mm RD 2TBD 4.0

SBB31C 14F502 810 mm RD 3TAP 4.0

C12-D1 11 11

C22-A1 7 7

C2AM05 KL30 1 — SBB32 — AM05 — HKSAC — MODULE ERA GLONASS

SBB32A 14401 2715 mm VT/RD 2TAD 0.35 — HKSAC

C1CB01-A KL30 16 — SBB44 — CB01 — MODULE - EBS

C22-A2 10 10

C22-A1 7 7

C2DC32 KL30 4 — SBB55 — DC32 — SWITCH - IGNITION

SBB55A 14401 2775 mm WH/RD 2TAD 1.0

S9BB66-A — S9BB66-B

SBB66H 15B594 615 mm YE/RD 2TAD 0.35

SBB66J 15B594 250 mm YE/RD 2TAD 0.35

SBB66K 15B594 880 mm YE/RD 2TAD 0.35

SBB66C 15A404 1440 mm YE/RD 2TAD 0.35

SBB66D 15A404 900 mm YE/RD 2TAD 0.35

SBB66E 15A404 465 mm YE/RD 2TAD 0.35

C9LN15-A 1 — 12V KL30 — LN15A — SBB66 — LAMP - STOWAGE BOX OHC LHS

C9LN15-B 1 — 12V KL30 — LN15B — SBB66 — LAMP - STOWAGE BOX OHC CENTER

C9LN15-C 1 — 12V KL30 — LN15C — SBB66 — LAMP - STOWAGE BOX OHC RHS

C9LN15D 1 — DU5T-14489-ABA — LN15D — LAMP - STOWAGE BOX BED LHS

C9LN15E 1 — DU5T-14489-ABA — LN15E — LAMP - STOWAGE BOX BED CENTER

C9LN15F 1 — DU5T-14489-ABA — LN15F — LAMP - STOWAGE BOX BED RHS

REFERENCE			
PART MUST COMPLY WITH RESTRICTED SUBSTANCE MANAGEMENT STANDARD WSS-M99P9999 A1 TO SAFEGUARD HEALTH SAFETY AND THE ENVIRONMENT			
DRAFTED IN ACCORDANCE WITH FORD MOTOR COMPANY ENGINEERING CAD AND DRAFTING STANDARDS VERSION 27.0		3RD ANGLE PROJ DIMENSIONS ARE IN MILLIMETERS	
CAD TYPE X-E3	CAD LOC. TCE	CAD FILE PHJC46-70C000-A3	DTM IS MASTER
OPER NO. N/A	UNIT N/A	DRAWING	SIZE A1
DESIGN fkarade3	DETAIL -----	TITLE: H625 - 2019 LP3 Design POWER DISTRIBUTION BOX	SHT 1 OF 1
CHECKED -----	SAFETY MFG USE		
SCALE NTS	DATE 20160512	DIVISION: EESE	
		PLANT: N/A	

Modified By: NVAYLA1
Date Changed: 12/5/2019

H625 2019 LP3 Design
C1.01 POWER DISTRIBUTION BOX

LTRS	REVISIONS		
ORIGINATOR	CHECKER	ENGR APP	MATL APP

24V KL15/KL50

POWER DISTRIBUTION BOX

EBS	CLUSTER	E-APU	INTARDER	TACHOGRAPH	LDWS BUZZERS	RADAR & CAMERA & PCCM	TCU	ECM	AFTERMARKET (CABIN & CHASSIS) & FMS (A & B)	FUEL PREFILTER HEATER	MFS	ERA GLONASS	TRAILER 7-PIN
FS067 7.5 A MINI	FS068 3 A MINI	FS069 3 A MINI	FS070 7.5 A MINI	FS071 5 A MINI	FS072 3 A MINI	FS073 7.5 A MINI	FS074 7.5 A MINI	FS075 5 A MINI	FS080 15 A MINI	FS087 20 A MINI	FS083 3 A MINI	FS081 3 A MINI	FS088 7.5 A MINI
67-1	68-1	69-1	70-1	71-1	72-1	73-1	74-1	75-1	80-1	87-1	83-1	81-1	88-1
67-2	68-2	69-2	70-2	71-2	72-2	73-2	74-2	75-2	80-2	87-2	83-2	81-2	88-2
24V KL15/50 BB1_1	24V KL15/50 BB1_2	24V KL15/50 BB1_1	24V KL15/50 BB1_2	24V KL15/50 BB1_1	24V KL15/50 BB1_2	24V KL15/50 BB1_1	24V KL15/50 BB1_2	24V KL15/50 BB1_1	24V KL15/50 BB2_1	24V KL15/50 BB2_3	24V KL15/50 BB2_2	24V KL15/50 BB2_2	24V KL15/50 BB2_4

CBB67A GN/BN 2TAD 0.75 14401 1565 mm	CBB68A GY/VT 2TAD 0.35 14401 3120 mm	CBB69A WH/VT 2TAD 0.75 14401 1565 mm	CBB70A YE/BU 2TAD 0.75 14401 1565 mm	CBB09A VT/GY 2TAD 0.75 14401 1155 mm	CBB72A GN/VT 2TAD 0.50 14401 1080 mm	CBB73A WH/BN 2TAD 0.75 14401 905 mm	CBB74A VT/BN 2TAD 0.50 14401 1620 mm	CBB75A YE/GY 2TAD 0.50 14401 1605 mm	CBB80A YE/GN 2TBD 2.5 14401 865 mm	CBB87A GN/BU 2TBD 2.5 14401 1605 mm	CBB83A BK/VT 2TAD 0.50 14401 3225 mm	CBB81A BU 2TAD 0.35 14401 2715 mm HKSAC	CBB88A BK 2TAD 0.50 14401 1605 mm
C12-B2 SB2 16 EU5T-14A459-AC	C12-B1 14 EU5T-14A459-AC	C12-G2 17 EU5T-14A459-DC	C22-A2 43 9U5T-14489-AC	C12-V2 CBB73B WH/BN 2TAD 0.75 14401 755 mm 6	C12-T2 3	C12-A2 1	C22-F2 2 JU5T-14A459-AA	C12-C2 1 AU5T-14A459-MA	C12-D2 10 AU5T-14A459-NA	C12-D2 17 AU5T-14A459-NA
C12-B1 14 EU5T-14489-AB	C12-G1 17 EU5T-14489-DB	C22-A1 43	C12-V1 CBB73C WH/BN 2TAD 0.75 13B712 1585 mm 6	C22-F1 2	C12-C1 1	C12-D1 10	C12-D1 17
C1CB01-A 13	C2MC01-A 28	C1A402 4	C1A260 25	C9MC35-A 3	C2RB10 3	C2RB11 3	C1MF01 8	C2MP41-A J JU5T-14489-SA	C9ES01 8	C1ET07 9	C1E115-A 69	C2AH01B 10	C2AH02 2	C1AH03 2	C1E232 B	C2X209 1	C2AM05 2 HKSAC	HRN-14F502 C1AT23-A 2
CBB67B GN/BN 2TAD 0.75 14398 2405 mm	CBB69B WH/VT 2TAD 0.75 14398 5480 mm	C11-P2 14	CBB70C YE/BU 2TAD 0.75 14K039 1360 mm FD2AB JU5T-14A464-BFA	CBB09C VT/GY 2TAD 0.75 15B594 825 mm	CBB72B GN/VT 2TAD 0.35 14401 2005 mm	CBB72C GN/VT 2TAD 0.35 14401 305 mm	CBB73D WH/BN 2TAD 0.75 13B767 655 mm FBFAH	CBB73E WH/BN 2TAD 0.50 14401 1485 mm	CBB73G WH/BN 2TAD 0.50 15A404 2965 mm J1EAB	CBB74B VT/BN 2TBD 2.5 15A808 3630 mm	CBB75B YE/GY 2TAD 0.75 14398 3220 mm	CBB80Z YE/GN 2TAD 1.0 15A404 2555 mm	CBB80C YE/GN 2TAD 1.0 14401 555 mm	CBB80E YE/GN 2TAD 1.5 14398 4355 mm	CBB87B GN/BU 2TBD 2.5 14398 4345 mm F2HT-14A464-BA		C11-Z2 6	CBB88C BK 3TAP 1.5 14F502 810 mm
C11-P1 14	CBB70B YE/BU 2TAD 0.75 15A808 3855 mm JU5T-14A624-LA	C99-A1 4	CBB09B VT/GY 2TAD 0.75 15A404 2635 mm	C22-A2 57	C11-R1 17	C22-A2 57 9U5T-14489-AC	C11-Z1 6	CBB88B BK 2TAD 1.5 14398 3880 mm
C99-A2 4	C11-R2 17	CBB73C WH/BN 2TAD 0.75 13B712 1585 mm	C22-A1 57	C11-Z2 6 TBD-026-F	C11-Z1 6 TBD-026-M
S2BB73	S2BB72	S2BB80-A
CB01	MC01	A402	A260	MC35	E115	AH01B	AH02	AH03	E232	X209	AM05	AT23-A
KL15 CBB67	KL15 CBB68	KL15 CBB69	KL15 CBB70	KL15 CBB09	KL15 CBB72	KL15 CBB73	KL15 CBB73	KL15 CBB73	KL15 CBB74	KL15 (I_S_T15) CBB75	KL15 CBB80	KL15 CBB80	KL15 CBB80	KL15 GD410	KL15 CBB83	KL15 CBB81	KL15 CBB88
MODULE - EBS	INSTRUMENT CLUSTER	UNIT - ELECTRONIC AIR PROCESSING - E-APU	MODULE - INTARDER EST42	TACHOGRAPH	BUZZER LHS (LDWS)	BUZZER RHS (LDWS)	MODULE - RADAR	CAMERA FORWARD LOOKING	MODULE - PREDICTIVE CRUISE CONTROL (PCCM)	UNIT - TRANSMISSION CONTROL - TCU	MODULE - ENGINE CONTROL - ECM (VEHICLE SIDE)	MODULE - FLEET MANAGEMENT (B)	CONNECTOR - AFTERMARKET CABIN	CONNECTOR - AFTERMARKET CHASSIS	HEATER - FUEL PREFILTER	SWITCH - MULTIFUNCTION STALK - MFS	MODULE - ERA GLONASS	CONNECTOR - TRAILER 7-PIN ISO 7638

REFERENCE			
PART MUST COMPLY WITH RESTRICTED SUBSTANCE MANAGEMENT STANDARD WSS-M99P9999 A1 TO SAFEGUARD HEALTH SAFETY AND THE ENVIRONMENT			
DRAFTED IN ACCORDANCE WITH FORD MOTOR COMPANY ENGINEERING CAD AND DRAFTING STANDARDS VERSION 27.0		3RD ANGLE PROJ DIMENSIONS ARE IN MILLIMETERS	
CAD TYPE X-E3	CAD LOC. TCE	CAD FILE PHJC46-70C000-A4	DTM IS MASTER
OPER NO. N/A	UNIT N/A	DRAWING	SIZE A1
DESIGN fkarade3	DETAIL -----	TITLE: H625 - 2019 LP3 Design POWER DISTRIBUTION BOX	SHT 1 OF 1
CHECKED -----	SAFETY MFG USE		
SCALE NTS	DATE 20160513	DIVISION: EESE	
		PLANT: N/A	

Modified By: NYAYLA1
Date Changed: 12/5/2019

H625 2019 LP3 Design
C1.01 POWER DISTRIBUTION BOX

LTRS	REVISIONS		
ORIGINATOR	CHECKER	ENGR APP	MATL APP

POWER DISTRIBUTION BOX

BELT MINDER W/ HEATED SEAT — FS077 10 A MINI

HEATED MIRRORS 20A — R24

24V KL30 BB — FS028 10 A MINI

SWITCHES & BRAKE LOCKING VALVE — FS084 5 A MINI

BACKUP LAMPS & BACKUP BUZZER 20A — R11

24V KL30 BB — FS085 10 A MINI

24V KL15/50 BB2_3 — 24V KL15/50 BB2_2 — R17 COIL — FS079 3 A MINI

STOP LAMPS 20A — R17

24V KL30 BB — FS023 10 A MINI

24V KL30 BB — FS016 15 A MINI

PARK LAMPS 20A — R19

TRAILER 15-PIN & AFTERMARKET (CABIN & CHASSIS) PARK LIGHTS — FS060 5 A MINI — FS059 10 A MINI

HORN 20A — R08

24V KL30 BB — R08 & R08 COIL — FS043 15 A MINI

24V KL30 BB — FS010 30 A J-CASE — FS101 7.5 A MINI

A/C BLOWER MOTOR 40A — R10

24V KL30 BB — R10 & R10 COIL — FS007 30 A J-CASE

24V KL15/50 BB2_2 — See Grounding Strategy - IP — 24V KL15/50 BB2_1

CBB77A WH 2TAD 0.75 14401 2060 mm — CRD17A GY 2TAD 1.5 14401 1455 mm — SBB28A GN/RD 2TAD 1.5 14401 300 mm — CBB84A VT 2TAD 0.75 14401 1200 mm — CAT03G GY/BN 2TAD 1.5 14401 1605 mm — CBB85A YE 2TAD 1.5 14401 300 mm — CBB79A VT/WH 2TAD 0.50 14401 300 mm — C12-F2 MCA81A WH/VT 2TAD 0.75 14401 1565 mm — C12-A2 CLS43A RD 2TAD 1.5 14401 1605 mm — AU5T-14A459-LA — SBB23A WH/RD 2TAD 1.0 14401 300 mm — SBB16A VT/RD 2TBD 2.5 14401 300 mm — LMP07A BN 2TAD 0.35 14401 1745 mm — LMP07AA BU/WH 2TBD 2.5 14401 150 mm — LMP07AE BU/WH 2TAD 1.5 14401 150 mm — CBB60A YE/VT 2TAD 0.50 14401 1385 mm — CBB59A BN/WH 2TAD 0.75 14401 885 mm — LMP07AB BU/WH 2TAD 1.5 14401 150 mm — CRH04A VT/GN 2TAD 0.75 14401 3150 mm — CRH02A BU/WH 2TAD 1.5 14401 1330 mm — SBB43A BU/RD 2TAD 1.5 14401 300 mm — SBB10A YE/RD 2TBD 4.0 14401 300 mm — MH1123A VT/BN 2TAD 0.50 14401 1730 mm — CH446B YE/GN 2TBD 2.5 14401 1770 mm — SBB07A WH/RD 2TBD 4.0 14401 300 mm

S2RD17 — S2BB84-A — S2BB84 — S2LM07 — S2BBA1 — SBBA1C GY/RD 2TAD 0.50 14401 150 mm — SBBA1A GY/RD 2TAD 0.50 14401 150 mm — SBBA1B GY/RD 2TAD 0.50 14401 150 mm — S2BB59 — S2BB60 — See Park Stand Lighting — S2RH02

CBB77B WH 2TAD 0.75 14A005 3510 mm — CRD17B GY 2TAD 0.75 14401 605 mm — CRD17C GY 2TAD 0.75 14401 1045 mm — CBB84Z VT 2TAD 0.35 14401 815 mm — CBB84N VT 2TAD 0.50 14401 815 mm — CBB84C VT 2TAD 0.35 14401 665 mm — CBB84T VT 2TAD 0.35 14401 705 mm — CBB84H VT 2TAD 0.35 15B594 160 mm — CBB84M VT 2TAD 0.75 14401 450 mm — CBB84V VT 2TAD 0.35 14A320_RHS 135 mm — CBB84AB VT 2TAD 0.35 14A320_RHS 205 mm — CBB84AA VT 2TAD 0.35 14A320_RHS 115 mm — CBB84Y VT 2TAD 0.35 14A320_LHS 390 mm — CBB84F VT 2TAD 0.35 14A320_LHS 345 mm — CBB84J VT 2TAD 0.35 15B594 960 mm — CBB84G VT 2TAD 0.35 15A404 2635 mm — CRD17F BK 2TAD 0.75 14A584 800 mm — CRD17G BK 2TAD 0.75 14K138 800 mm — CRD17D GY 2TAD 0.75 14A005 1660 mm — CRD17E GY 2TAD 0.75 14014 460 mm — CBB84U VT 2TAD 0.75 15A404 960 mm — CAT03D GY/BN 2TAD 1.5 14398 3560 mm — CAT03E GY/BN 2TAD 1.5 14398 2920 mm — CAT03H GY/BN 2TAD 1.5 14398 990 mm — CAT03F GY/BN 3TAP 1.5 14F502 840 mm — CAT03A GY/BN 2TAD 0.75 2035 mm 14405 — CAT03A1 GY/BN 2TAD 0.75 1325 mm 14405 — CAT03B GY/BN 2TAD 0.75 — CAT03B1 GY/BN 2TAD 0.75 — CAT03B2 GY/BN 2TAD 0.75 — CAT03B3 GY/BN 2TAD 0.75 — CAT03K GY/BN 2TAD 0.75 12663 660 mm WSPAK — CAT03L GY/BN 2TAD 1.5 12663 680 mm WSPAK — CAT03C GY/BN 3TAP 1.0 460 mm — CAT03C1 GY/BN 700 mm — CAT03C2 GY/BN 510 mm — CAT03C3 GY/BN 520 mm — CAT19B1 BU 2TAD 0.75 1560 mm 14405 — CAT19B2 BU 0.75 — CAT19B3 BU 0.75 — CAT19B BU 0.75 — CAT19C1 BU 2TAD 0.75 1800 mm 14405 — CAT19C2 BU 0.75 — CAT19C3 BU 0.75 — CAT19C BU 0.75 — CBB59C BN/WH 2TAD 0.75 14401 615 mm — CBB59E BN 2TAD 1.5 14398 1535 mm — CBB59B BN/WH 2TAD 0.75 14401 720 mm — CBB59D BK 2TAD 0.75 14398 2790 mm — CBB59F BK 3TAP 1.5 14F502 840 mm — CBB59G BN 3TAP 1.5 14F502 840 mm — CBB59H BK 2TAD 1.5 14398 1090 mm — CBB59K BN 2TAD 1.5 14398 1090 mm — CRH02C BU/WH 2TAD 1.0 13B712 1625 mm — CRH02B BU/WH 2TAD 1.0 14401 295 mm — CRH02D BU/WH 2TAD 1.0 13B767 115 mm — CRH02H BU/WH 2TAD 1.0 13B767 190 mm — CRH02E BU/WH 2TAD 1.5 14401 275 mm — CRH02F BU/WH 2TAD 1.5 14401 1060 mm — CRH02G BU/WH 2TAD 1.5 14398 4325 mm — CBB59L BN/WH 2TAD 0.75 14401 720 mm — CBB59M BN/WH 2TAD 0.75 14401 885 mm — CBB59N BN/WH 2TAD 0.75 14401 1385 mm — CBB59P BN/WH 2TAD 0.75 14401 1150 mm — CBB59Q BN/WH 2TAD 0.75 14401 1330 mm — CBB59R BN/WH 2TAD 0.75 14401 1770 mm — CBB59S BN/WH 2TAD 0.75 14401 2060 mm — CBB59T BN/WH 2TAD 0.75 14401 3510 mm

C33-A2 — C33-A1 — C33-B2 — C33-B1 — C35-B1 — C35-A2 — C36-B1 — C36-A2 — C99-A1 — C99-A2 — C22-D2 — C22-D1 — C22-A2 — C22-A1 — C22-C2 — C22-C1 — C14-A1 — C14-A2 — C12-C2 — C12-C1 — C12-F1 — C12-A1 — C1LS35 — C1LS36 — C1LS36-2 — C4LS36 — C1CB01-C — C4CA26 — C1LS36 — C1LS36-2 — C4LS36 — C2AM02-A — C2AM02-C — C11-Z1 — C11-Z2 — C11-R1 — C11-R2 — C12-D2 — C12-D1 — C12-W1 — C12-W2 — C22-G2 — C22-G1 — S1AT16 — S1AT16-B — S4AT16 — S4CA26 — S1LS43-B — C4MP09 — C11014 — S1RH02 — C2AM02-C — C2H102-B

MULTIPLEXED — 2MULTIPLEXED — SOUNDER - BACKUP — MP09 — CAT03 — TBD-002-M

C2A390 — C2A385 — C2A389 — C2CA50 — C9A320 — C2RB05 — C2AM02-C — HRN-15B594 S9BB84-C — HRN-14F502 — HRN-13B767 — HRN-14F502 — C2H102-B

C7051 FUNC. ILL. CBB84 TBD-006-M — INPUT 1 CBB84 — KL15 CBB84 — FUNC. ILL. TBD-008-M — INPUT 1 CBB84 TBD-006-M — REVERSE GEAR SUPPLY CAT16 — BACKUP LAMPS CAT03 — BACKUP CAT03 — LAMP 2 MCA81 — BRAKE LAMP CCA26 — PARK LAMP CBB59 — PWR CBB59 — REAR LAMP LEFT CBB59 — REAR LAMP RIGHT CBB59 — COIL GND CRH04 — HORN CRH02 — HORN CRH02 — PARKING LIGHT SUPPLY CLF61 — PWR CRH02 — TRAILER RELAY SUPPLY ZA103 — B + VH440

JU5T-14489-AXA — JU5T-14489-BBA — 5F1T-14489-AA — 9U5T-14489-AC — 8V5T-14489-VB — 8V5T-14489-VB — JU5T-14A459-AA — JU5T-14A459-MA — AU5T-14A459-NA — JU5T-14A459-FA — AU5T-14A459-LA — TBD-026-M — TBD-026-F — TBD-026-M — TBD-004-F

J38AE — J8PAE

THESE CONNECTIONS ARE PROVIDED BY SUPPLIER.

HS04 — AM02 — PM26 — PM31 — A390 — A385 — A320 — A418 — A389 — RB05 — AM02 — LS35 — LS36 — CB01 — LS35 — LS36 — AM02 — AH02 — AH02 — AH03 — AH02 — AH02 — AH03 — R115 — AH02 — AH03 — RH02

BELT MINDER W/ HEATED SEAT — MODULE - BODY CONTROL — ASSEMBLY - MIRROR LHS — ASSEMBLY - MIRROR RHS — SWITCH - TRAILER BRAKE — SWITCH - TRAILER TAG AXLE LIFTER — SWITCH - TRIPLE ROOF MARKER LAMPS — VALVE-BRAKE LOCKING — SWITCH - HILL HOLDER — SWITCH - LANE DEPARTURE WARNING — CONNECTOR - TRAILER 15-PIN — MODULE - BODY CONTROL — LAMP - TAIL LHS — LAMP - TAIL RHS — MODULE - EBS — LAMP - TAIL LHS — LAMP - TAIL RHS — MODULE - BODY CONTROL — CONNECTOR - AFTERMARKET CABIN — CONNECTOR - AFTERMARKET CHASSIS — CONNECTOR - TRAILER 15-PIN — CLOCKSPRING — CONNECTOR - AFTERMARKET CABIN — CONNECTOR - AFTERMARKET CHASSIS — HORN — MODULE - BODY CONTROL (BCM) — MODULE - BLOWER SPEED CONTROL

REFERENCE	PART MUST COMPLY WITH RESTRICTED SUBSTANCE MANAGEMENT STANDARD WSS-M99P9999 A1 TO SAFEGUARD HEALTH SAFETY AND THE ENVIRONMENT
DRAFTED IN ACCORDANCE WITH FORD MOTOR COMPANY ENGINEERING CAD AND DRAFTING STANDARDS VERSION 27.0	3RD ANGLE PROJ DIMENSIONS ARE IN MILLIMETERS
CAD TYPE: X-E3	CAD LOC.: TCE
CAD FILE: PHJC46-70C000-A5	DTM: IS MASTER
OPER NO.: N/A	UNIT: N/A
DRAWING	SIZE: A1
DESIGN: fkarade3	DETAIL: -----
TITLE: H625 - 2019 LP3 Design POWER DISTRIBUTION BOX	SHT 1 OF 1
CHECKED: -----	SAFETY: MFG USE
SCALE: NTS	DATE: 20160505
DIVISION: EESE	
PLANT: N/A	

Modified By: NYAYLA1
Last Changed: 12/2019

H625 2019 LP3 Design
C1.01 POWER DISTRIBUTION BOX

LTRS	REVISIONS		
ORIGINATOR	CHECKER	ENGR APP	MATL APP

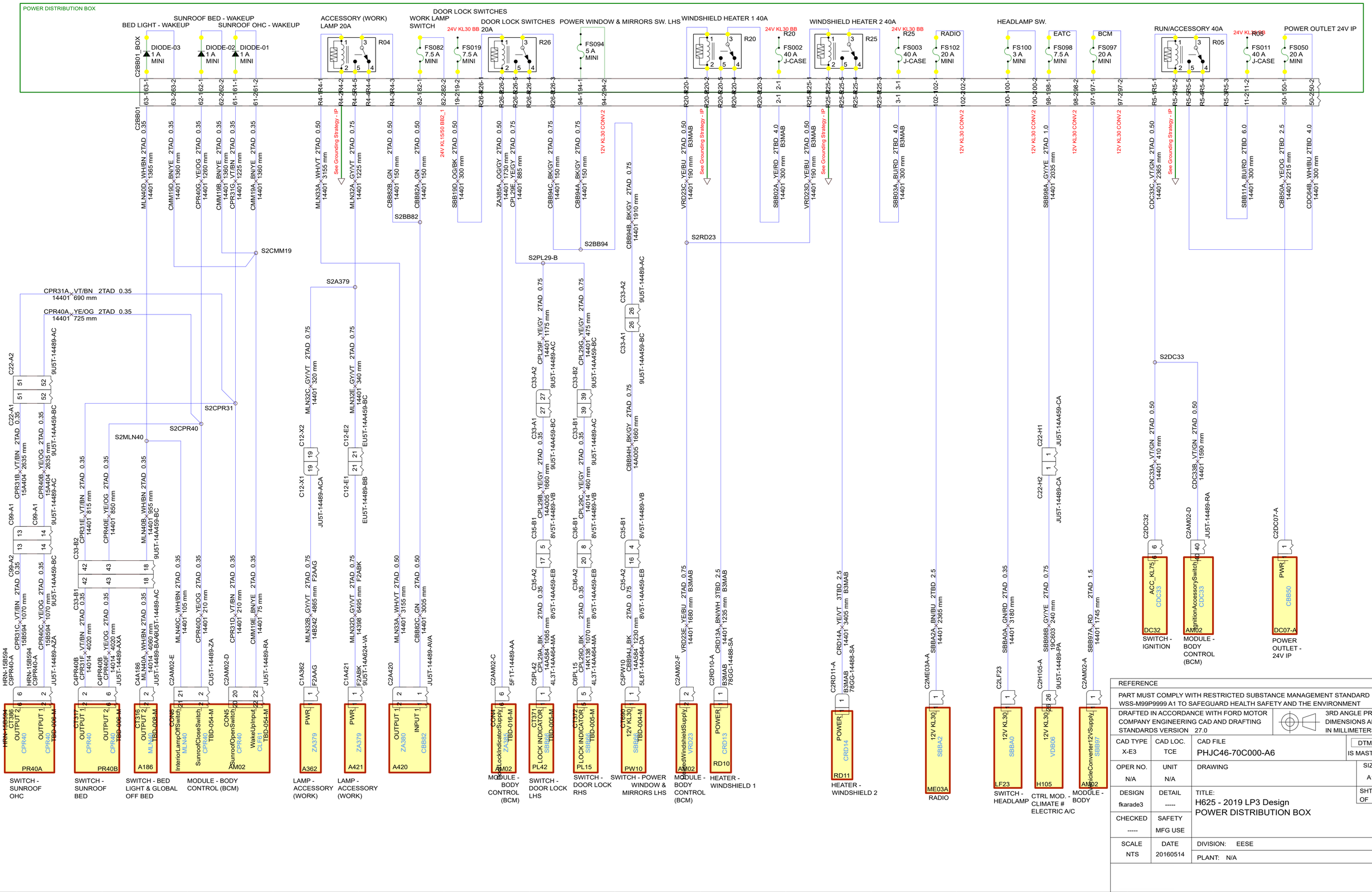

REFERENCE			
PART MUST COMPLY WITH RESTRICTED SUBSTANCE MANAGEMENT STANDARD WSS-M99P9999 A1 TO SAFEGUARD HEALTH SAFETY AND THE ENVIRONMENT			
DRAFTED IN ACCORDANCE WITH FORD MOTOR COMPANY ENGINEERING CAD AND DRAFTING STANDARDS VERSION 27.0			3RD ANGLE PROJ DIMENSIONS ARE IN MILLIMETERS
CAD TYPE X-E3	CAD LOC. TCE	CAD FILE PHJC46-70C000-A6	DTM IS MASTER
OPER NO. N/A	UNIT N/A	DRAWING	SIZE A1
DESIGN fkarade3	DETAIL -----	TITLE: H625 - 2019 LP3 Design POWER DISTRIBUTION BOX	SHT 1 OF 1
CHECKED -----	SAFETY MFG USE		
SCALE NTS	DATE 20160514	DIVISION: EESE	
		PLANT: N/A	

Modified By: NVAVLA1
Date Changed: 12/5/2019

H625 2019 LP3 Design
C1.01 POWER DISTRIBUTION BOX

LTRS	REVISIONS		
ORIGINATOR	CHECKER	ENGR APP	MATL APP

POWER DISTRIBUTION BOX

TACHOGRAPH — 24V KL30 BB — FS017 5 A MINI — 17-2 — 17-2×SBB17A_RD 2TAD 0.75 14401 1155 mm AGCAB
TACHOGRAPH — FS064 3 A MINI — ADR — 64-1 — 64-1×SBB64A_VT/RD 2TAD 0.75 14401 1155 mm
64-2 — 64-2×MDG62B_GN/OG 2TAD 0.75 14401 1565 mm AGCAB
ECAS RCU — FS076 3 A MINI — 76-1 — 76-1×CBB76A_BU/BN 2TAD 0.50 14401 2060 mm DWABN | DWABN
24V KL15/50 BB2_1 — 76-2 — 76-2×24V KL15/50 BB2_1
R06 & R27 — 24V KL30 BB — FS040 7.5 A MINI — 40-1 — 40-1×SBB40A_VT/RD 2TAD 0.75 14401 150 mm
SUNBLIND MOTOR - DOWN 20A — R27 — R27-1 — R27-1×A_CPR40C_YE/OG 2TAD 0.50 14401 1155 mm
R27-2 — See Grounding Strategy - IP — R27-2×SBB40B_VT/RD 2TAD 0.75 14401 150 mm
R27-5 — See Grounding Strategy - IP
R27-4 — R27-4×A_CPR31C_VT/BN 2TAD 0.50 14401 1155 mm
R27-3 — R27-3×MPR86A_WH/GN 2TAD 0.75 14401 1155 mm
SUNBLIND MOTOR - UP 20A — R06 — R6-1 — R6-1×A_CPR31A_VT/BN 2TAD 0.50 14401 1155 mm
R6-2 — See Grounding Strategy - IP — R6-2×SBB40C_VT/RD 2TAD 0.75 14401 150 mm
R6-5 — See Grounding Strategy - IP
R6-4 — See Grounding Strategy - IP — R6-4×MPR85A_BN/YE 2TAD 0.75 14401 1155 mm
R6-3 — R6-3×CE354N_BN/BU 2TAD 0.50 14401 1605 mm
DENOX MODULE & UREA HEATERS 20A — R09 — R9-1 — R9-1×RE354D_WH/GN 2TAD 0.50 14401 1605 mm
R9-2 — R9-2×CE355E_BU/OG 2TAD 1.5 14401 1605 mm
R9-5 — R9-5×SBB47A_WH/RD 2TAD 1.5 14401 300 mm
R9-4 — 24V KL30 BB — FS047 15 A MINI — 47-1 — 47-1×SBB47A_WH/RD 2TAD 1.5 14401 300 mm
R9-3 — R9-3×C12-C2 AU5T-14A459-MA
UREA LEVEL & QUALITY SENSOR & NOX SENSORS & TURBO & EGR VALVE 20A — R12 — 24V KL30 BB — FS026 20 A MINI — 26-1 — 26-1×SBB26A_YE/RD 2TBD 2.5 14401 300 mm
R12-1 — R12-1×CE612B_GY/VT 2TAD 0.50 14401 1605 mm
R12-2 — R12-2×CE613B_WH/VT 2TAD 0.50 14401 1605 mm
R12-5 — R12-5×CDC39A_GN/BU 2TBD 2.5 14401 150 mm
R12-4 — R12-4×S2DC39
R12-3 — NOX SENSOR 1 & 2 — FS090 10 A MINI — 90-1 — 90-1×CBB90A_YE/OG 2TAD 0.75 14401 1565 mm
90-2 — 90-2×CDC39B_GN/BU 2TAD 4.0 14401 150 mm
UREA LEVEL & QUALITY SENSOR — FS091 7.5 A MINI — 91-1 — 91-1×CBB91A_BN 2TAD 0.75 14401 1605 mm
91-2 — 91-2×CDC39C_GN/BU 2TAD 4.0 14401 150 mm
EGR VALVE & TURBO CHARGER ACTUATOR — FS092 15 A MINI — 92-1 — 92-1×CBB92A_GN/WH 2TAD 1.0 14401 1605 mm
92-2 — 92-2×CDC39D_GN/BU 2TAD 4.0 14401 150 mm
TRIPLE ROOF MARKER LAMPS 20A — R21 — 24V KL30 BB — FS029 15 A MINI — 29-1 — 29-1×SBB29A_GY/RD 2TAD 1.0 14401 300 mm
R21-1 — R21-1×CAE01A_WH/GN 2TAD 0.50 14401 1155 mm
R21-2 — See Grounding Strategy - IP
R21-5 — R21-5×CAT11A_BN 2TAD 0.75 14401 1155 mm
R21-4 — R21-4×SBB29B_GY/RD 2TAD 0.75 14401 150 mm
R21-3 — S2BB29
R21 & R23 — FS029 15 A MINI — 29-1 — 29-1×SBB29A_GY/RD 2TAD 1.0 14401 300 mm
BEACON LAMP 20A — R23 — R23-1 — R23-1×CAA11A_GN/BU 2TAD 0.50 14401 1155 mm
R23-2 — See Grounding Strategy - IP — R23-2×CLN84B_VT/OG 2TAD 1.5 14401 915 mm
R23-5 — R23-5×SBB29C_GY/RD 2TAD 1.0 14401 150 mm
R23-4 — R23-4×S2LN84
R23-3 — CABIN TILTING MOTOR 40A — R15 — 24V KL30 — FS009 50 A J-CASE
R15-1 — R15-1×9-2 SBB09A_RD 3TBD 4.0 14401 300 mm
R15-2 — See Grounding Strategy - IP — R15-2×C12-W2 MAH21A_OG/BU 3TBD 4.0 14401 1525 mm
R15-5 — R15-5×C12-W1
R15-4 — R15-4×C1A350-A MAH21B_GY/VT 3TBD 4.0 13B712 1795 mm A3AAM
R15-3 — R15-3×C1A350 PIGTAIL

C22-A2 — 42 — 48 — 9U5T-14489-AC — C22-A1 — 42 — 48 — SBB64B_VT/RD 2TAD 0.75 15A404 2635 mm — SBB17B_RD 2TAD 0.75 15A404 2635 mm
C99-A2 — 3 — 10 — C99-A1 — 3 — 10 — SBB64C_VT/RD 2TAD 0.75 15A404 825 mm — SBB17C_RD 2TAD 0.75 15B594 885 mm
C12-F2 — 18 — C12-F1 — 18 — MDG62A_GN/OG 2TAD 0.75 14398 4595 mm AGCAB
C33-A2 — 25 — C33-A1 — 25 — CBB76B_BN/RD 2TAD 0.75 14A005 3435 mm DWABN | DWAB9
C2A182-1 — 1 — 7L1T-14A459-BA
HARNESS IS PROVIDED BY SUPPLIER.
C22-A2 — 54 — 55 — 9U5T-14489-AC — C22-A1 — 54 — 55 — C99-A2 — 15 — 17 — C99-A1 — 15 — 17 — A_CPR40B_YE/OG 2TAD 0.50 15A404 2635 mm — A_CPR31B_VT/BN 2TAD 0.50 15A404 2635 mm
A_CPR40C_YE/OG 2TAD 0.35 15B594 1085 mm — A_CPR31C_VT/BN 2TAD 0.35 15B594 1085 mm
C22-A2 — 12 — 13 — 9U5T-14489-AC — C22-A1 — 12 — 13 — C9A342 — 6 — 2 — 1 — 3 — MPR86B_WH/GN 2TAD 0.75 15A404 935 mm — MPR85B_BN/YE 2TAD 0.75 15A404 935 mm — 5W1T-14A624-AA
C1E115-A — 50 — 93 — C1E115-A — 50 — 93 — CE354A_BN/BU 2TAD 1.5 14398 645 mm — RE354C_GN/BU 2TAD 0.75 14398 3160 mm
S1E354-B — CE354M_BN/BU 2TAD 0.75 14398 2575 mm — CE354B_BN/BU 2TAD 1.5 14398 1215 mm
C1A161 — 1 — CE354E — CE354G — BN/BU 2TAD 1.0 — BN/BU 1.0
S1E354-A — CE354C_BN/BU 2TAD 1.5 14D378 475 mm
S1E356 — CE356C_BU/OG 2TAD 1.5 14D378 425 mm
C11-D2 — 7 — C11-D1 — 7 — CE356D_BU/OG 2TAD 1.5 14398 3820 mm
C1E348 — 9 — 5 — CE354D — CE354F — CE354H — BN/BU 2TAD 0.75 — BN/BU 1.0 — CE356A_CE356A1_BU/OG 2TAD 1.5 14D378 670 mm, 14D378 3820 mm — CE356B_CE356B1_BU/OG 2TAD 1.5 14D378 350 mm, 14D378 3820 mm
C1A160 — 1 — CE356 — P — HRN-14398 C11-B1 — C11-B2 — 15 — 18 — JU5T-14A464-AYA
ECM C2.96 — ECM C2.89
C12-A2 — 3 — 4 — C12-A1 — 3 — 4 — CE612C_GY/VT 2TAD 0.75 14398 3340 mm — CE613C_WH/VT 2TAD 0.75 14398 3340 mm
S1BB90-B — 1 — CBB90D_YE/OG 2TAD 0.75 9L430 145 mm DGAA7
C11-G2 — 9 — C11-G1 — 9 — CBB90B_YE/OG 2TAD 0.75 14398 6030 mm DGAA7 — EU5T-14489-AB
S1BB90 Splice-1
CBB90C_YE/OG 2TAD 0.75 14398 4925 mm DGAB3
C11-D2 — 1 — C11-D1 — 1 — CBB91B_BN 2TAD 0.75 14398 3850 mm DGAA7
C12-D2 — 15 — C12-D1 — 15 — AU5T-14A459-NA — AU5T-14489-SAA
C12-A2 — 5 — C12-A1 — 5 — CBB90E_YE/OG 4TAP 0.75 9L430 165 mm DGAA7 — 872-860541 HIRSCHMANN CON
C1E826A1 — 1 — DGAA7 — 872-860541 HIRSCHMANN CON — C1E826B — CBB90F_YE/OG 4TAP 0.75 9L430 245 mm DGAA7 — 872-860541 HIRSCHMANN CON
C1E826A2 — 1 — CBB90G_YE/OG 3TAP 0.75 14398 610 mm DGAB3 — TBD-005-F
C1E834 — 1 — VE634B — CBB91C — GN — BN — 2TAD 0.75 — 475 mm 14D378 DGAB3 DGAA7 — 0.75
HRN-14398 C11-A1 — 12 — CBB92B_GN/WH 2TAD 1.0 14398 3235 mm
VALVE - EGR & ACTUATOR - TURBO CHARGER PWR
C22-A2 — 56 — 20 — 9U5T-14489-AC — C22-A1 — 56 — CAE01B_WH/GN 2TAD 0.50 15A404 2635 mm JBPAH — CAT11B_BN 2TAD 1.5 15A404 3790 mm JBPAH
S9AA11
C99-A2 — 32 — C99-A1 — 32 — CAE01C_WH/GN 2TAD 0.35 15B594 1120 mm — CAT11C_BN 2TAD 1.5 15B594 1780 mm
C99-A2 — 18 — C99-A1 — 18 — CAA11B_GN/BU 2TAD 0.50 15A404 2635 mm J3BAE
C99-A2 — 2 — C99-A1 — 2 — CAA11C_GN/BU 2TAD 0.35 15B594 1090 mm — C9A320A — C9A320 — CT1009 OUTPUT 1 — CAA11 — TBD-008-M — A320A — SWITCH - BEACON LAMP
C22-A2 — 33 — C22-A1 — 33 — 9U5T-14489-AC — CLN84A_VT/OG 2TAD 1.5 15A404 4465 mm J3BAE
C9A335 — 1 — J3BAE — PWR — CLN84 — A335 — LAMP - ROOF BEACON
C12-Y2 — 5 — C12-Y1 — 5 — JU5T-14489-AEA — CLN84D_VT/OG 2TAD 1.5 14401 705 mm — JU5T-14A459-SA
C2AM02-F — 22 — MAH20A_GY/BU 2TAD 0.50 14401 1870 mm — C9A335 — PWR — CabinTiltValveSupply — ZA376 — AM02 — MODULE - BODY CONTROL
C1A350 — 1 — PIGTAIL — A3AAM — C1A350-A — 1 — 1 — MAH21B_GY/VT 3TBD 4.0 13B712 1795 mm A3AAM — KL30 — ZA375 — ZA350 — MOTOR - CABIN TILTING

HRN-15B594 — C9MC35-A — 1 — C9MC35-D — 3 — KL30 — KL30 (ADR UNIT) — SBB64 — SBB17 — MC35 — TACHOGRAPH
C1A102-A — 2 — KL30 OUTPUT — SBB64 — A102 — UNIT - ADR
KL15 — CBB76 — A182 — UNIT - REMOTE CONTROL ECAS
OUTPUT 2 — OUTPUT 1 — CPR31 — A292 — SWITCH - SUNBLIND
MOTOR + — MOTOR - — ZA372 — ZA371 — A342 — MOTOR - SUNBLIND
O_V_RH11 — O_S_RL27 — CE354 — CDC39 — E115 — MODULE - ENGINE CONTROL - ECM (VEHICLE SIDE)
P — CE354 — A161 — HEATER - HOSE 2
PWR PUMP — PWR RV — SIG HTR — CE354 — CE356 — E348 — MODULE - DENOXTRONIC CONTROL
CT35 — P — CE356 — A160 — HEATER - HOSE 1
PWR — CBB90 — E826A2 — SENSOR - NOX 1 (EU5)
PWR — CBB90 — E826A1 — SENSOR - NOX 1 (EU6)
PWR — CBB90 — E826B — SENSOR - NOX 2 (EU6)
E834 — SENSOR - UREA LEVEL & QUALITY (WEMA)
OUTPUT 1 — CAED1 — A320 — SWITCH - TRIPLE ROOF MARKER LAMPS
PWR — CLN84 — LS28 — LAMP - TRIPLE ROOF MARKER LHS
PWR — CLN84 — LS52 — LAMP - TRIPLE ROOF MARKER CENTER
PWR — CLN84 — LS33 — LAMP - TRIPLE ROOF MARKER RHS

REFERENCE			
PART MUST COMPLY WITH RESTRICTED SUBSTANCE MANAGEMENT STANDARD WSS-M99P9999 A1 TO SAFEGUARD HEALTH SAFETY AND THE ENVIRONMENT			
DRAFTED IN ACCORDANCE WITH FORD MOTOR COMPANY ENGINEERING CAD AND DRAFTING STANDARDS VERSION 27.0		3RD ANGLE PROJ DIMENSIONS ARE IN MILLIMETERS	
CAD TYPE X-E3	CAD LOC. TCE	CAD FILE PHJC46-70C000-A7	DTM IS MASTER
OPER NO. N/A	UNIT N/A	DRAWING	SIZE A1
DESIGN fkarade3	DETAIL -----	TITLE: H625 - 2019 LP3 Design POWER DISTRIBUTION BOX	SHT 1 OF 1
CHECKED -----	SAFETY MFG USE		
SCALE NTS	DATE 20160517	DIVISION: EESE	
		PLANT: N/A	

Modified By: NYAYLA1
Last Changed: 12/3/2019

H625 2019 LP3 Design
C1.02 - BODY CONTROL MODULE (BCM)

LTRS	REVISIONS		
ORIGINATOR	CHECKER	ENGR APP	MATL APP

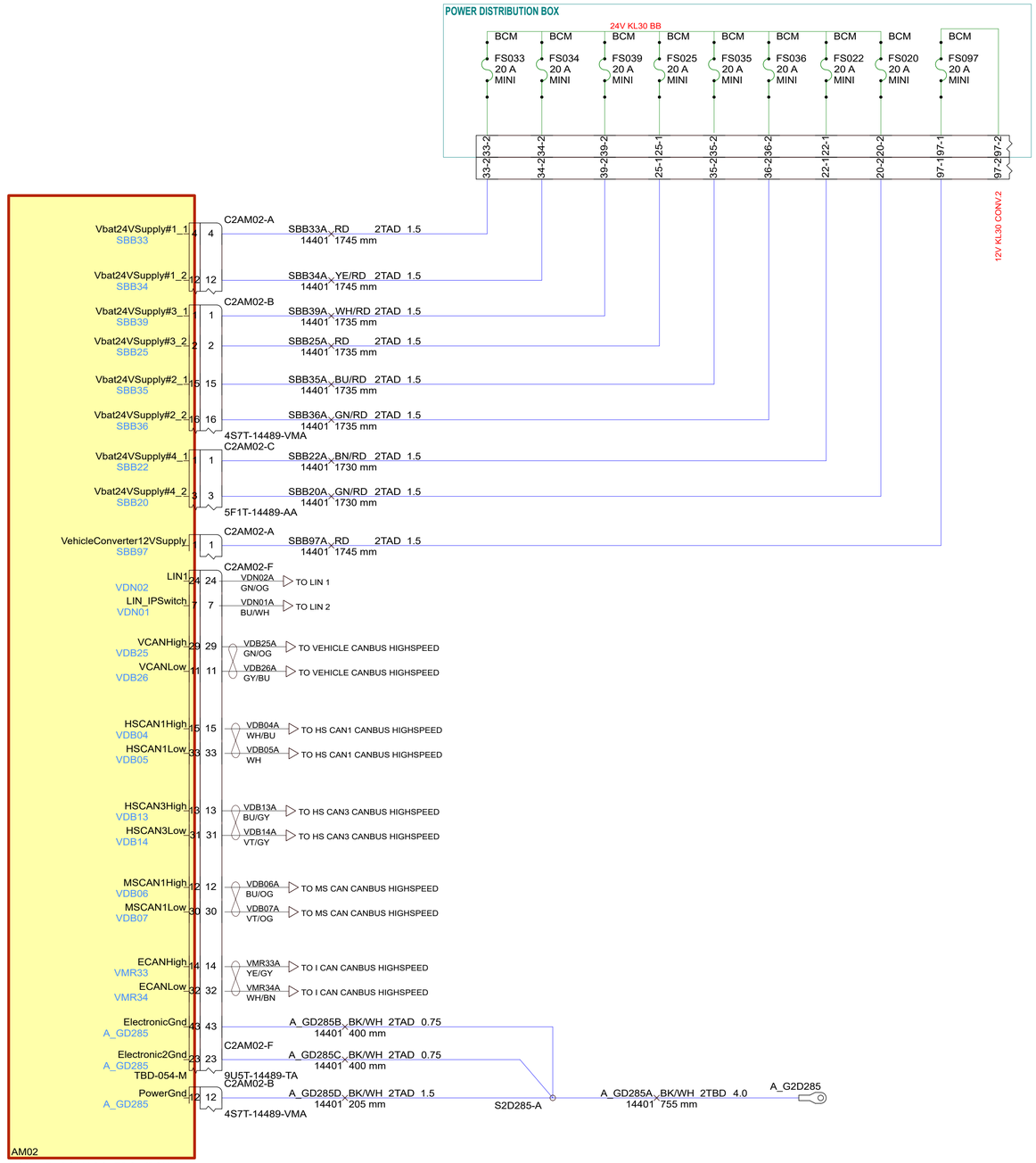

REFERENCE

PART MUST COMPLY WITH RESTRICTED SUBSTANCE MANAGEMENT STANDARD WSS-M99P9999 A1 TO SAFEGUARD HEALTH SAFETY AND THE ENVIRONMENT

DRAFTED IN ACCORDANCE WITH FORD MOTOR COMPANY ENGINEERING CAD AND DRAFTING STANDARDS VERSION 27.0

3RD ANGLE PROJ
DIMENSIONS ARE IN MILLIMETERS

CAD TYPE	CAD LOC.	CAD FILE	DTM
X-E3		PHJC46-70C001-A0	IS MASTER

OPER NO.	UNIT	DRAWING	SIZE
N/A	N/A		A1

DESIGN	DETAIL	TITLE:	SHT 1 OF 1
sakay	-----	H625 - 2019 LP3 Design BODY CONTROL MODULE (BCM)	

CHECKED	SAFETY
-----	MFG USE

SCALE	DATE	DIVISION: EESE
N/A	0	PLANT: N/A

Modified By: ABEKES
Date Changed: 1/16/2019

H625 2019 LP3 Design
C1.02 - BODY CONTROL MODULE (BCM)

LTRS	REVISIONS		
ORIGINATOR	CHECKER	ENGR APP	MATL APP

MODULE - BODY CONTROL (BCM)

AM02

CON3
- 4 EngineBrakeSupply TBD-016-M
- 2 DiffLock1FeedbackSwitch CX204
- 26 DifferentialLockValve1Supply ZA230
- 12 DiffLock1DriverRequestSwitch VCA07
- 50 PTOAcknowledgementSwitch #2816
- 39 PTOValveSupply VE925
- 18 PTOActivation1Switch CE913
- 25 TrailerTagAxleLiftingSwitch ZA362
- 44 AEBSDeactivationSwitch A_GD214
- 8 LaneDepartureSwitch CRB05
- 32 DPFManuelRegenSwitch CCB09
- 51 DPFInhibitSwitch CCB09
- 45 RockingSwitch CE943
- 10 PowerOFFroadSwitch CE942
- 49 ClockSpring2LHSensor ZA350
- 33 ClockSpring3LHSensor VES10
- 35 ClockSpringSensorGnd CES05
- 34 ClockSpring1RHSensor ZA361
- 45 ClockSpring2RHSensor ZA359
- 18 ClockSpring3RHSensor ZA360
- 48 ClockSpring1LHSensor ZA351
- 10 SteeringColumnSwitchIlluminationSupply ZA349
- 27 HazardSwitch CLS32
- 53 CabinTiltSwitch ZA205
- 13 ACCutOffSupply CH401

C2AM02-B — CCB10A_YE/GN_2TAD_0.75 14401 1410 mm — C1E115-A I_S_DIG13 58 — E115 (CLM2 TBD-096-M) — MODULE - ENGINE CONTROL - ECM (VEHICLE SIDE)

C2AM02-B — 4S7T-14489-VMA — C12-D1 5 — C12-D2 5 — AU5T-14A459-SAA — AU5T-14A459-NA

C2AM02-D — CX204A_GN/BU_2TAD_0.35 14401 1070 mm — C4A370 DWAB2 & SE_B4 — A370 (ACKNOWLADGE CX204) — SWITCH - DIFFERENTIAL LOCK ACKNOWLEDGE — •MULTIPLEXED

C2AM02-D — JU5T-14489-RA — C12-F2 7 — C12-F1 7 — DWAB2 & SE_B6 — 6490 mm 14398 — C4A366 DWAB2 & SE_B6 — A366 (PWR ZA230) — SOLENOID - DIFFERENTIAL LOCK — •MULTIPLEXED

C2AM02-F — RCA21A_BN/GN_2TAD_0.35 14401 900 mm — RCA21B_BN/GN_2TAD_0.35 14401 1125 mm — S2CA21 — C12-G2 18 — C12-G1 18 — EU5T-14A459-DC — EU5T-14489-DB — RCA21C_BN/GN_2TAD_0.35 14401 415 mm — C22-C2 16 — C22-C1 16

C2AM02-E — VCA07A_BU/OG_2TAD_0.35 14401 1165 mm — C12-F2 7 — C12-F1 7 — DWAB2 & SE_B6 — 7015 mm 14398 — C4A366 DWAB2 & SE_B6 — A366 (PWR ZA230) — SOLENOID - DIFFERENTIAL LOCK — •MULTIPLEXED

C2AM02-F — RE327A_GY/VT_2TAD_0.35 14401 1505 mm — RE327B_GY/VT_2TAD_0.75 15A808 3840 mm — C11-L1 5 — C11-L2 5 — RE327C_GY/VT_2TAD_0.75 14K039 535 mm — C1E326 1 — E326 (PTO ACKNOW #2816) — SWITCH - PTO ACKNOWLEDGE

C2AM02-F — VE925A_GN/WH_2TAD_0.35 14401 1195 mm — VE925B_GN/WH_2TAD_0.35 14A320_LHS 375 mm — C22-D2 7 — C22-D1 7 — VE925C_GN/WH_2TAD_0.75 14398 5595 mm — C1E925 1 — A195 (PTO VALVE VE925) — VALVE - POWER TAKE OFF ACTUATOR (PTO)

C2AM02-E — VE925F_GN/WH_2TAD_0.35 14401 230 mm — S2E925 — CE913B_BU_2TAD_0.35 14401 1275 mm — VE925E_GN/WH_2TAD_0.35 14401 230 mm — C2E912 1 — E912 (FUNC. ILL. VE925 OUTPUT 1/2 CE913) — SWITCH - POWER TAKE OFF (PTO)

C2AM02-E — MAT61A_WH/VT_2TAD_0.75 14401 1275 mm — MAT61B_WH/VT_2TAD_0.35 14A320_LHS 345 mm — C2A385 2 — A385 (OUTPUT 1/2 ZA362) — SWITCH - TRAILER TAG AXLE LIFTER

C2AM02-E — CCB11A_BU_2TAD_0.35 14401 1165 mm — CCB11B_BU_2TAD_0.35 14A320_RHS 250 mm — C22-C2 7 — C22-C1 7 — C2A199 2 — A199 (INPUT 1/2 A_GD214) — SWITCH - ACTIVE EMERGENCY BRAKING SYSTEM (AEBS)

C2AM02-E — CRB05A_GN/OG_2TAD_0.35 14401 1165 mm — CRB05B_GN/OG_2TAD_0.35 14A320_RHS 250 mm — C2RB05 2 — RB05 (OUTPUT 1/2 CRB05) — SWITCH - LANE DEPARTURE WARNING SYSTEM (LDWS)

C2AM02-E — RCB37A_BN/BU_2TAD_0.35 14401 1165 mm — RCB37B_BN/BU_2TAD_0.35 14A320_RHS 250 mm — C2E702 6 — E702 (OUTPUT 2/6 CCB09 OUTPUT 1/2 CCB09) — SWITCH - DIESEL PARTICULATE REGENERATIVE / INHIBITOR (DPF)

C2AM02-F — CCB09A_GY/BU_2TAD_0.35 14401 1315 mm — CCB09B_GY/BU_2TAD_0.35 14401 1165 mm — CCB09A_GY/BU_2TAD_0.35 14A320_RHS 250 mm — C2A176 6 — A176 (OUTPUT 1/2 CE943 OUTPUT 2/6 CE942) — SWITCH - AUTOMATIC TRANSMISSION POWER / ROCKING (AMT)

C2AM02-E — CE943A_GY/VT_2TAD_0.35 14401 1165 mm — CE943B_GY/VT_2TAD_0.35 14A320_RHS 250 mm — CE942A_WH/GN_2TAD_0.35 14401 1165 mm — CE942B_WH/GN_2TAD_0.35 14A320_RHS 250 mm — C22-C1 18

C2AM02-D — VES13A_WH/VT_2TAD_0.35 14401 2375 mm — VME14A_GY/YE_2TAD_0.35 14401 2375 mm — CES05B_BN/BU_2TAD_0.35 14401 515 mm — CES05C_BN/BU_2TAD_0.35 14401 515 mm — CMC29A_GN/VT_2TAD_0.35 14401 2375 mm — CMC51A_BN/BU_2TAD_0.35 14401 2375 mm — CMM114A_WH_2TAD_0.35 14401 2375 mm — VES10A_WH_2TAD_0.35 14401 2375 mm — VLN04B_VT/GY_2TAD_0.35 14401 1590 mm — C2R115 12 — R115 (ANALOG 2 LHS ZA350; ANALOG 3 LHS VES10; SENSOR GND CES05; SENSOR GND CES05; ANALOG 1 RHS ZA361; ANALOG 2 RHS ZA359; ANALOG 3 RHS ZA360; ANALOG SIGNAL 1 LHS ZA351; SPLY - HALL SNSR RHS ZA349) — CLOCKSPRING

C2AM02-F — JU5T-14489-RA — C2AM02-F — VLN04A_VT/GY_2TAD_0.35 14401 970 mm — S2A349

C2AM02-D — JU5T-14489-RA — C2AM02-D — VLN04C_VT/GY_2TAD_0.35 14401 1045 mm — C2LS32 3 — ILLUMINATION ZA349 — SW CLS32 6 — LS32 — SWITCH - HAZARD

C2AM02-E — CLS32A_BN/YE_2TAD_0.35 14401 1830 mm — C12ZA351 2 — CAB TILT ZA205 2 — ZA351 — SWITCH - CABIN TILTING

C2AM02-E — MAH22A_BU/OG_2TAD_0.35 14401 1085 mm — C12-X2 1 — C12-X1 1 — MAH22B_BU/OG_2TAD_0.75 14B242 660 mm — A3AAM JU5T-14489-ACA

C2AM02-C — CH401C_VT/WH_2TAD_0.35 14401 1365 mm — C12-B2 18 — EU5T-14A459-AC — C12-B1 18 — EU5T-14489-AB — CH401B_VT/WH_2TAD_0.75 14398 3305 mm — HRN-14398 C11-A1 — 10 — C1H302 CLUTCH - A/C COMPRESSOR SOLENOID

C2AM02-C — 5F1T-14489-AA

REFERENCE

PART MUST COMPLY WITH RESTRICTED SUBSTANCE MANAGEMENT STANDARD WSS-M99P9999 A1 TO SAFEGUARD HEALTH SAFETY AND THE ENVIRONMENT

DRAFTED IN ACCORDANCE WITH FORD MOTOR COMPANY ENGINEERING CAD AND DRAFTING STANDARDS VERSION 27.0

3RD ANGLE PROJ DIMENSIONS ARE IN MILLIMETERS

CAD TYPE	CAD LOC.	CAD FILE	DTM
X-E3	TCE	PHJC46-70C001-A1	IS MASTER
OPER NO.	UNIT	DRAWING	SIZE
N/A	N/A		A1
DESIGN	DETAIL	TITLE: H625 - 2019 LP3 Design BODY CONTROL MODULE (BCM)	SHT 1 OF 1
sakay	-----		
CHECKED	SAFETY		
-----	MFG USE		
SCALE	DATE	DIVISION: EESE	
NTS	20120101	PLANT: N/A	

Modified By: KYAYLA
Date Changed: 12/5/2019

H625 2019 LP3 Design
C1.02 - BODY CONTROL MODULE (BCM)

LTRS	REVISIONS		
ORIGINATOR	CHECKER	ENGR APP	MATL APP

MODULE - BODY CONTROL (BCM)
C2AM02-C
CON4
InteriorLightDimmingSupply
CBB60
TBD-016-M
AM02
5F1T-14489-AA
15
15

CT373
DIMMING
22
22
CBB60
TBD-040-M
AM05
MODULE -
ERA GLONASS
C2AM05
HKSAC
CLN04BN BU/BN 2TAD 0.35
14401 1055 mm HKSAC
S2LN04-A
CLN04A BU/BN 2TAD 0.75
14401 930 mm
CLN04B BU/BN 2TAD 0.35
14401 355 mm
CLN04C BU/BN 2TAD 0.35
14401 245 mm
CLN04D BU/BN 2TAD 0.35
14401 1125 mm
C22-A2
50
50
9U5T-14489-AC
C22-A1
CLN04E BU/BN 2TAD 0.35
14401 1250 mm
C33-B2
C33-B1
6
6
9U5T-14489-AC
CLN04AN BU/BN 2TAD 0.35
15A404 2635 mm
C22-D2
30
30
C22-D1
0.35
CLN04T BU/BN 2TAD 0.35
14A320_LHS 120 mm
C22-C2
15
15
C22-C1
CLN04AK BU/BN 2TAD 0.35
14A320_RHS 50 mm
C99-A1
12
12
C99-A2
CLN04AP BU/BN 2TAD 0.35
15B594 670 mm
CLN04AZ BU/BN 2TAD 0.35
14014 2665 mm
S4LN04-A
CLN04AL BU/BN 2TAD 0.35
14A320_RHS 50 mm
CLN04AM BU/BN 2TAD 0.35
14A320_RHS 80 mm
S2LN04-G
S2LN04-B
S2LN04-E
S2LN04-F
S9LN04-A

C2A390 — CLN04J BU/BN 2TAD 0.35 14A320_LHS 270 mm — DIMMING CBB60 A390 — SWITCH - TRAILER BRAKE
C2AH11 — CLN04K BU/BN 2TAD 0.35 14A320_LHS 255 mm — DIMMING CBB60 AH11 — SWITCH - LOW LINER
C2E912 — CLN04L BU/BN 2TAD 0.35 14A320_LHS 255 mm — DIMMING CBB60 E912 — SWITCH - POWER TAKE OFF (PTO)
C2A391 — CLN04M BU/BN 2TAD 0.35 14A320_LHS 235 mm — DIMMING CBB60 A391 — SWITCH - AUXILIARY HEATER IP (DRY)
C2A385 — CLN04V BU/BN 2TAD 0.35 14A320_LHS 225 mm — DIMMING CBB60 A385 — SWITCH - TRAILER TAG AXLE LIFTER
C2A393 — CLN04P BU/BN 2TAD 0.35 14A320_LHS 235 mm — DIMMING CBB60 A393 — SWITCH - AUXILIARY HEATER IP (DRY+WET)

C2A190 — CLN04AV BU/BN 2TAD 0.35 14A320_RHS 190 mm — DIMMING CBB60 A190 — SWITCH - MANUEVERING
C2A369 — CLN04Y BU/BN 2TAD 0.35 14A320_RHS 150 mm — DIMMING CBB60 A369 — SWITCH - DIFFEREN TIAL LOCK
C2HJC46-70C001-A3.C2
C2A389 — CLN04AB BU/BN 2TAD 0.35 14A320_RHS 150 mm — DIMMING CBB60 A389 — SWITCH - HILL HOLDER
C2A388 — CLN04AC BU/BN 2TAD 0.35 14A320_RHS 150 mm — C1679 DIMMING CBB60 A388 — SWITCH - BLENDING

C2A199 — CLN04AD BU/BN 2TAD 0.35 14A320_RHS 120 mm — DIMMING CBB60 A199 — SWITCH - ACTIVE EMERGENCY BRAKING SYSTEM (AEBS)
C2RB05 — CLN04AE BU/BN 2TAD 0.35 14A320_RHS 120 mm — DIMMING CBB60 RB05 — SWITCH - LANE DEPARTURE WARNING SYSTEM (LDWS)
C2E702 — CLN04AF BU/BN 2TAD 0.35 14A320_RHS 220 mm — DIMMING CBB60 E702 — SWITCH - DIESEL PARTICULATE REGENERATIVE / INHIBITOR (DPF)
C2A176 — CLN04AG BU/BN 2TAD 0.35 14A320_RHS 120 mm — DIMMING CBB60 A176 — SWITCH - AUTOMATIC TRANSMISSI ON POWER
C2A396 — CLN04AH BU/BN 2TAD 0.35 14A320_RHS 120 mm — DIMMING CBB60 A396 — SWITCH - ELECTRONIC STABILITY PROGRAM (ESP)

C9A187 — CLN04AR BU/BN 2TAD 0.35 15B594 420 mm — DIMMING CBB60 A187 — SWITCH - DOME & AMBIENT LAMPS OHC
C9A170 — CLN04AS BU/BN 2TAD 0.35 15B594 415 mm — DIMMING CBB60 A170 — SWITCH - AJAR ON/OFF OHC
C9PR40-A — CLN04AT BU/BN 2TAD 0.35 15B594 400 mm — DIMMING CBB60 PR40A — SWITCH - SUNROOF
C9A292 — CLN04AU BU/BN 2TAD 0.35 15B594 415 mm — DIMMING CBB60 A292 — SWITCH - SUNBLIND
C9A320 — CLN04AY BU/BN 2TAD 0.35 15B594 450 mm — DIMMING CBB60 A320 — SWITCH - TRIPLE ROOF MARKER LAMPS

C4A186 — CLN04BA BU/BN 2TAD 0.35 14014 1395 mm JU5T-14489-BAA — DIMMING CBB60 A186 — SWITCH - BED LIGHT & GLOBAL
C2A185 — CLN04BB BU/BN 2TAD 0.35 14014 1365 mm — DIMMING CBB60 A185 — SWITCH - DOME & AMBIENT LAMPS BED
C4A417 — CLN04BM BU/BN 2TAD 0.35 14014 1415 mm GZDAE JU5T-14489-AZA — DIMMING CBB60 A417 — SWITCH - AUXILARY HEATER BED (DRY+WET)
C4A278 — CLN04BC BU/BN 2TAD 0.35 14014 1345 mm — DIMMING CBB60 A278 — SWITCH - RADIO CONTROL BED
C2A277 — CLN04BD BU/BN 2TAD 0.35 14014 1365 mm GZDAA — DIMMING CBB60 A277 — SWITCH - AUXILIARY HEATER BED (DRY)
CLN04BE BU/BN 2TAD 0.35 14014 1355 mm JU5T-14489-AXA — DIMMING CBB60 PR40B — SWITCH - SUNROOF BED

REFERENCE			
PART MUST COMPLY WITH RESTRICTED SUBSTANCE MANAGEMENT STANDARD WSS-M99P9999 A1 TO SAFEGUARD HEALTH SAFETY AND THE ENVIRONMENT			
DRAFTED IN ACCORDANCE WITH FORD MOTOR COMPANY ENGINEERING CAD AND DRAFTING STANDARDS VERSION 27.0		3RD ANGLE PROJ DIMENSIONS ARE IN MILLIMETERS	
CAD TYPE X-E3	CAD LOC. -----	CAD FILE PHJC46-70C001-A2	DTM IS MASTER
OPER NO. -----	UNIT -----	DRAWING	SIZE A1
DESIGN sakay	DETAIL -----	TITLE: H625 - 2019 LP3 Design BODY CONTROL MODULE (BCM)	SHT 1 OF 1
CHECKED -----	SAFETY -----		
SCALE NTS	DATE 20120101	DIVISION: EESE	
		PLANT: -----	

Modified By: NVAYLA1
Date Changed: 12/9/2019

H625 2019 LP3 Design
C1.02 - BODY CONTROL MODULE (BCM)

LTRS	REVISIONS		
ORIGINATOR	CHECKER	ENGR APP	MATL APP

MODULE - BODY CONTROL (BCM)

AM02

AmbientLightSwitch CLN26 · DomeLampSwitch ZA399 · AjarOnOffControl ZA231 · BedAreaLightSwitch VLN74 · InteriorLampOffSwitch MLN40 · SunroofOpenSwitch CPR40 · SunroofCloseSwitch CPR40 · BedAreaLightingSupply MLN50 · VolumeUpSwitch CMEM1 · VolumeDownSwitch CMEM0 · MapReadingLampDriverSideSwitch CLN19 · MapReadingLampPassSideSwitch CLN20 · DomeLightSupply #2810 · MapLampPassengerPWMSupply ZA298 · AmbientLightSupply CLN58 · MapLampDriverPWMSupply CLN82 · CruiseControlSetMinusSwitch CES06 · CruiseControlSetPlusSwitch ZA333 · CruiseControlResumeSwitch ZA335 · CruiseControlOFFSwitch ZA334 · SunroofMotorOpenSupply CPR39 · SunroofMotorCloseSupply CPR22 · CON5 Spare2LowSideSwitch TBD-054-M · CON7 ManeuveringSwitchIllimunationSupply TBD-054-M · ManeuveringSwitch ZA104 · ManuveringSwitch ZA105 TBD-054-M

S2A399 · S2LN26 · S2MLN40 · S2CPR31 · S2CPR40 · S9LN83 · S9LN58 · S2ES06 · S2A333

SWITCH - DOME & AMBIENT LAMPS BED — A185

SWITCH - DOME & AMBIENT LAMPS OHC — A187

SWITCH - AJAR ON/OFF OHC — A170

SWITCH - BED LIGHT & GLOBAL OFF BED — A186

SWITCH - SUNROOF BED — PR40B

SWITCH - SUNROOF OHC — PR40A

LAMP - BED AREA — LN19B

LAMP - RADIO CONTROL BED — A278

SWITCH - MAP READING LAMP (IP) — LN12

LAMP - MULTIFUNCTIONAL DOME — LN19A

LAMP - INTEGRATED DOME RHS — LN06

LAMP - INTEGRATED DOME LHS — LN02

CONNECTOR - AFTERMARKET CABIN — AH02

CONNECTOR - AFTERMARKET CHASSIS — AH03

MOTOR - SUNROOF — A343

SWITCH - PARKING BRAKE — MC25

SWITCH - MANUEVERING — A190

REFERENCE			
PART MUST COMPLY WITH RESTRICTED SUBSTANCE MANAGEMENT STANDARD WSS-M99P9999 A1 TO SAFEGUARD HEALTH SAFETY AND THE ENVIRONMENT			
DRAFTED IN ACCORDANCE WITH FORD MOTOR COMPANY ENGINEERING CAD AND DRAFTING STANDARDS VERSION 27.0		3RD ANGLE PROJ DIMENSIONS ARE IN MILLIMETERS	
CAD TYPE X-E3	CAD LOC. TCE	CAD FILE PHJC46-70C001-A3	DTM IS MASTER
OPER NO. N/A	UNIT N/A	DRAWING	SIZE A1
DESIGN sakay	DETAIL -----	TITLE: H625 - 2019 LP3 Design BODY CONTROL MODULE (BCM)	SHT 1 OF 1
CHECKED -----	SAFETY MFG USE		
SCALE NTS	DATE 20120101	DIVISION: EESE	
		PLANT: N/A	

Modified By: ABEKEL
Date Changed: 11/05/2019

H625 2019 LP3 Design
C1.02 - BODY CONTROL MODULE (BCM)

LTRS	REVISIONS		
ORIGINATOR	CHECKER	ENGR APP	MATL APP

MODULE - BODY CONTROL (BCM)

AM02

C2AM02-E: 43 PowerWindowPASSUpSwitch CPW20 | 1 PowerWindowPASSDownSwitch CPW19 | 10 SteeringColumnSwitchIlluminationSupply ZA349 | 41 MainLeftMirrorUpCtrl MPM45 | 5 MainLeftMirrorDownLeftCtrl MPM03 | 42 MainLeftMirrorRightCtrl MPM47 | 6 MainRightMirrorUpCtrl MPM46 | 27 MainRightMirrorDownLeftCtrl MPM06 | 8 MainRightMirrorRightCtrl MPM48

C2AM02-F: 6 PowerWindowLeftUpRelay CPW35 | 5 PowerWindowLeftDownRelay CPW35 | 35 HallSensorLeftGND VPW45 | 45 HallSensorLeftSupply VPW45 | 18 PowerWindowDirectionLeftHallSensor CAT35 | 54 PowerWindowDirectionRightHallSensor ZA225 | 36 HallSensorRightGND VPW44 | 9 HallSensorRightSupply ZA349

C2AM02-A: 3 PowerWindowRightDownRelay CPW40 | 2 PowerWindowRightUpRelay CPW40

C2AM02-B: 10 WaterPumpSupply CON3 TBD-016-M

C2AM02-A: 16 WiperHighRelay B_GD120 | 15 WiperLowRelay CRW25

C2AM02-D: 26 WiperParkPositionSwitch CRW25

C2AM02-B: 6 WasherForwardSupply CRW24

C2AM02-F: 19 StepLightsSupply (H62X) MLN31

C33-B2 / C33-A2 / C33-B1 / C33-A1 — 40 pin connectors

C36-A1 / C36-A2 — 28 pin connectors

C35-C1 / C35-A2 / C35-C2 / C35-A1 — 30 pin connectors

C36-C1 / C36-A2 / C36-C2 / C36-A1 — 31 pin connectors

C6PW19 — PW19 SWITCH - POWER WINDOW RHS
- 2 PASS UP SW CPW20 — CPW20A_WH/OG_2TAD_0.35, 14401, 1060 mm
- 3 PASS DOWN SW CPW19 — CPW19A_VT/BN_2TAD_0.35, 14401, 1025 mm
- 4 ILLUMINATION ZA349 — VLN04F_VT/GY_2TAD_0.35, 14401, 1150 mm

C5PM26-1 — PM26 ASSEMBLY - MIRROR LHS
- 3 UP MPM45 — MPM45C_BK_2TAD_0.50, 14A584, 800 mm
- 4 DOWN LEFT MPM03 — MPM03C_BK_2TAD_0.50, 14A584, 800 mm
- 5 RIGHT MPM47 — MPM47C_BK_2TAD_0.50, 14A584, 800 mm

C6PM31-1 — PM31 ASSEMBLY - MIRROR RHS
- 3 UP MPM46 — MPM46C_BK_2TAD_0.75, 14K138, 800 mm
- 4 DOWN LEFT MPM06 — MPM06C_BK_2TAD_0.75, 14K138, 800 mm
- 5 RIGHT MPM48 — MPM48C_BK_2TAD_0.75, 14K138, 800 mm

C5PW11 — PW11 MOTOR - POWER WINDOW REGULATOR LHS
- 3 MOTOR VOLTAGE A2 CPW35 — CPW34C_BK_2TAD_1.5, 14A584, 805 mm
- 6 MOTOR VOLTAGE A1 CPW35 — CPW35C_BK_2TAD_1.5, 14A584, 805 mm
- 1 HALL-IC VOLTAGE (-) CPW35 — VPW38C_BK_2TAD_0.35, 14A584, 805 mm
- 4 HALL-IC VOLTAGE (+) VPW38 — VPW39C_BK_2TAD_0.35, 14A584, 805 mm
- 5 EXIT HALL-IC SIGNAL1 VPW45 — VPW98C_BK_2TAD_0.35, 14A584, 805 mm

C6PW20 — PW20 MOTOR - POWER WINDOW REGULATOR RHS
- 6 MOTOR VOLTAGE A1 CPW40 — CPW40C_BK_2TAD_1.5, 14K138, 800 mm
- 3 MOTOR VOLTAGE A2 CPW40 — CPW41C_BK_2TAD_1.5, 14K138, 800 mm
- 1 HALL-IC VOLTAGE (-) VPW44 — VPW44C_BK_2TAD_0.35, 14K138, 800 mm
- 4 HALL-IC VOLTAGE (+) ZA349 — VPW45C_BK_2TAD_0.35, 14K138, 800 mm
- 5 EXIT HALL-IC SIGNAL1 ZA225 — VPW99C_BK_2TAD_0.35, 14K138, 800 mm

C1A412 — A412 PUMP - RESIDUAL WATER
- 2 SPLY VE530 — VE530C_GY/BN_3TAP_0.75, 13B712, 255 mm, GZHAB

C1RW01 — RW01 MOTOR - WIPER
- 4 HIGH SPEED B_GD120 — CRW37B_GN/BU_3TAD_1.5, 14B242, 1900 mm
- 3 LOW SPEED CRW25 — RRW24B_GN/VT_3TAD_1.5, 14B242, 1900 mm
- 2 PARK SIGNAL CRW25 — CRW25B_BU/GY_2TAD_0.75, 14B242, 1935 mm

S1E530 — VE530B_GY/BN_2TAD_0.75, 13B712, 1670 mm, GZHAB

C1RW14 — RW14 PUMP - WASHER
- 1 PWR CRW24 — CRW24C_GY_2TAD_0.75, 17A611
- HARNESS IS PROVIDED BY SUPPLIER

C1LN70 — LN70 LAMP - STEPWELL RHS
- 2 PWR MLN31 — MLN31A_GN/BN_2TAD_0.75, 13B712, 1450 mm

C1LN69 — LN69 LAMP - STEPWELL LHS
- 2 PWR MLN31 — MLN31C_GN/BN_2TAD_0.75, 14B242, 3265 mm

C5CLN31-A — CLN31 LAMP - DOOR TRIM PUDDLE LHS
- 1 PWR MLN31 — MLN31E_BK_2TAD_0.75, 14A584, 1165 mm

C6CLN32-A — CLN32 LAMP - DOOR TRIM PUDDLE RHS
- 1 PWR MLN31 — MLN31H_BK_2TAD_0.75, 14K138, 1160 mm

S2A349

S2A374

MLN31L_GN/BN_2TAD_0.35, 14401, 690 mm

MLN31G_GN/BN_2TAD_0.35, 14401, 880 mm

MLN31K_GN/BN_2TAD_0.35, 14401, 770 mm

REFERENCE			
PART MUST COMPLY WITH RESTRICTED SUBSTANCE MANAGEMENT STANDARD WSS-M99P9999 A1 TO SAFEGUARD HEALTH SAFETY AND THE ENVIRONMENT			
DRAFTED IN ACCORDANCE WITH FORD MOTOR COMPANY ENGINEERING CAD AND DRAFTING STANDARDS VERSION 27.0		3RD ANGLE PROJ DIMENSIONS ARE IN MILLIMETERS	
CAD TYPE: X-E3	CAD LOC.: TCE	CAD FILE: PHJC46-70C001-A4	DTM: IS MASTER
OPER NO.: N/A	UNIT: N/A	DRAWING	SIZE: A1
DESIGN: sakay	DETAIL: -----	TITLE: H625 - 2019 LP3 Design BODY CONTROL MODULE (BCM)	SHT 1 OF 1
CHECKED: -----	SAFETY: MFG USE		
SCALE: NTS	DATE: 20120101	DIVISION: EESE	
		PLANT: N/A	

Modified By: NYAYLA1
Date Changed: 12/5/2019

H625 2019 LP3 Design
C1.02 - BODY CONTROL MODULE (BCM)

LTRS	REVISIONS		
ORIGINATOR	CHECKER	ENGR APP	MATL APP

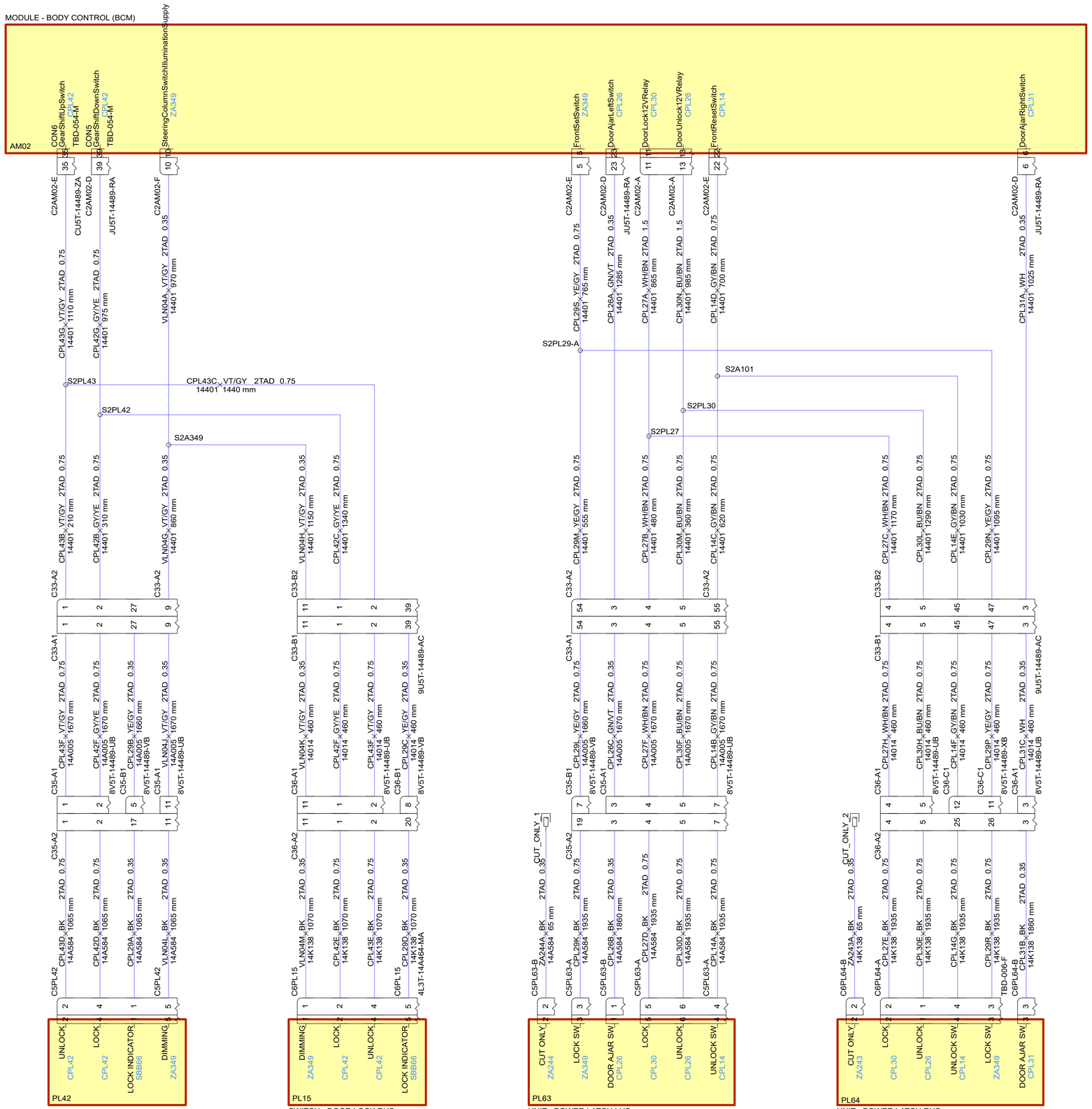

REFERENCE			
PART MUST COMPLY WITH RESTRICTED SUBSTANCE MANAGEMENT STANDARD WSS-M99P9999 A1 TO SAFEGUARD HEALTH SAFETY AND THE ENVIRONMENT			
DRAFTED IN ACCORDANCE WITH FORD MOTOR COMPANY ENGINEERING CAD AND DRAFTING STANDARDS VERSION 27.0		3RD ANGLE PROJ DIMENSIONS ARE IN MILLIMETERS	
CAD TYPE X-E3	CAD LOC. -----	CAD FILE PHJC46-70C001-A5	DTM IS MASTER
OPER NO. -----	UNIT -----	DRAWING	SIZE A1
DESIGN sakay	DETAIL -----	TITLE: H625 - 2019 LP3 Design BODY CONTROL MODULE (BCM)	SHT 1 OF 1
CHECKED -----	SAFETY -----		
SCALE NTS	DATE 20120101	DIVISION: EESE	
		PLANT: -----	

Modified By: ABEKEL
Date Changed: 11/26/2019

LTRS	REVISIONS		
ORIGINATOR	CHECKER	ENGR APP	MATL APP

H625 2019 LP3 Design
C3.01 - ENGINE CAN J1939 NETWORK

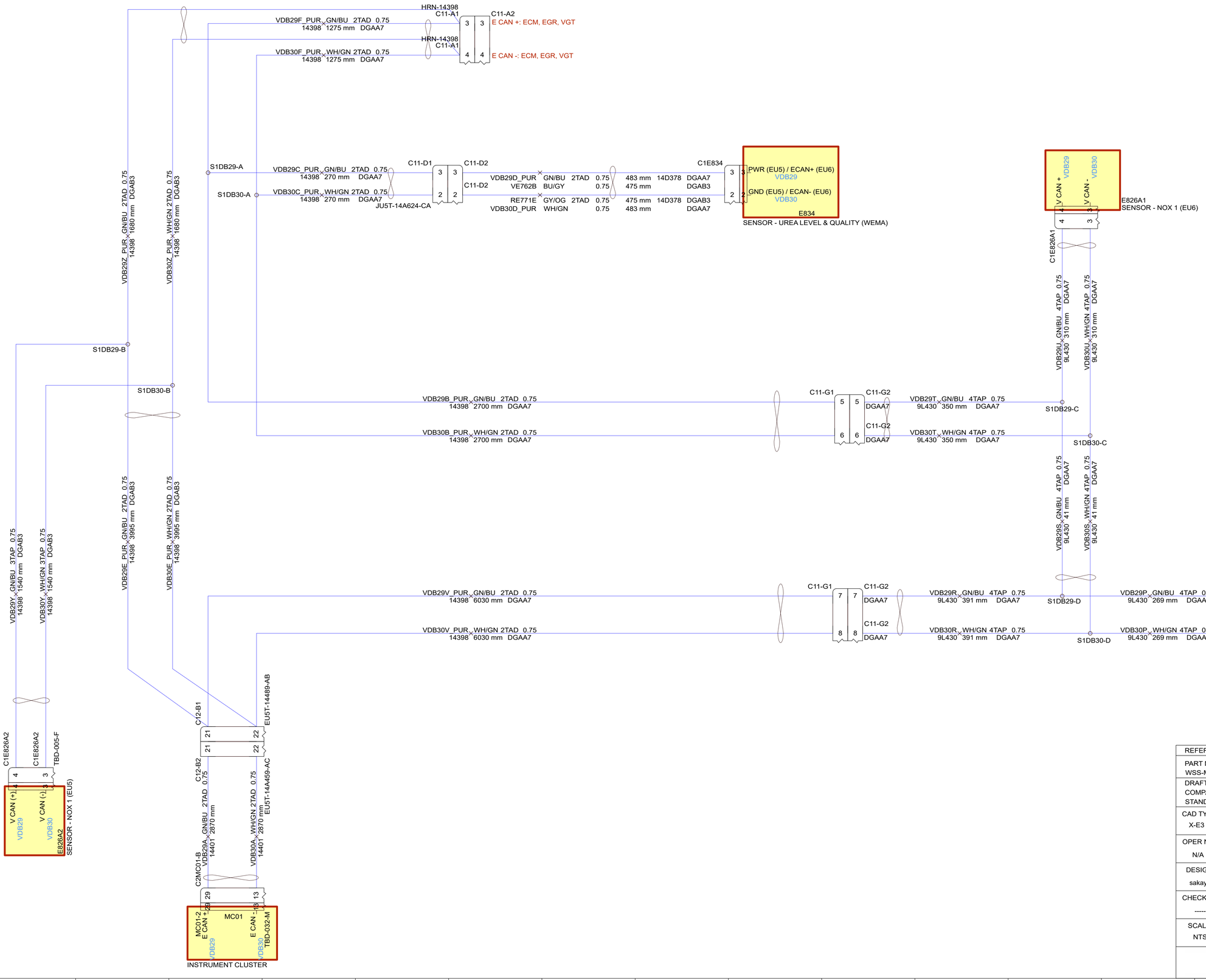

REFERENCE			
PART MUST COMPLY WITH RESTRICTED SUBSTANCE MANAGEMENT STANDARD WSS-M99P9999 A1 TO SAFEGUARD HEALTH SAFETY AND THE ENVIRONMENT			
DRAFTED IN ACCORDANCE WITH FORD MOTOR COMPANY ENGINEERING CAD AND DRAFTING STANDARDS VERSION 27.0		3RD ANGLE PROJ DIMENSIONS ARE IN MILLIMETERS	
CAD TYPE X-E3	CAD LOC. TCE	CAD FILE PHJC46-70C030-A2	DTM IS MASTER
OPER NO. N/A	UNIT N/A	DRAWING	SIZE A1
DESIGN sakay	DETAIL -----	TITLE: H625 - 2019 LP3 Design ENGINE CAN J1939 NETWORK	SHT 1 OF 1
CHECKED -----	SAFETY MFG USE		
SCALE NTS	DATE 20120101	DIVISION: EESE	
		PLANT: N/A	

Modified By: NYAYLA1
Date Changed: 12/2/2019

H625 2019 LP3 Design
C1.02 - BODY CONTROL MODULE (BCM)

LTRS	REVISIONS			
ORIGINATOR	CHECKER	ENGR APP	MATL APP	

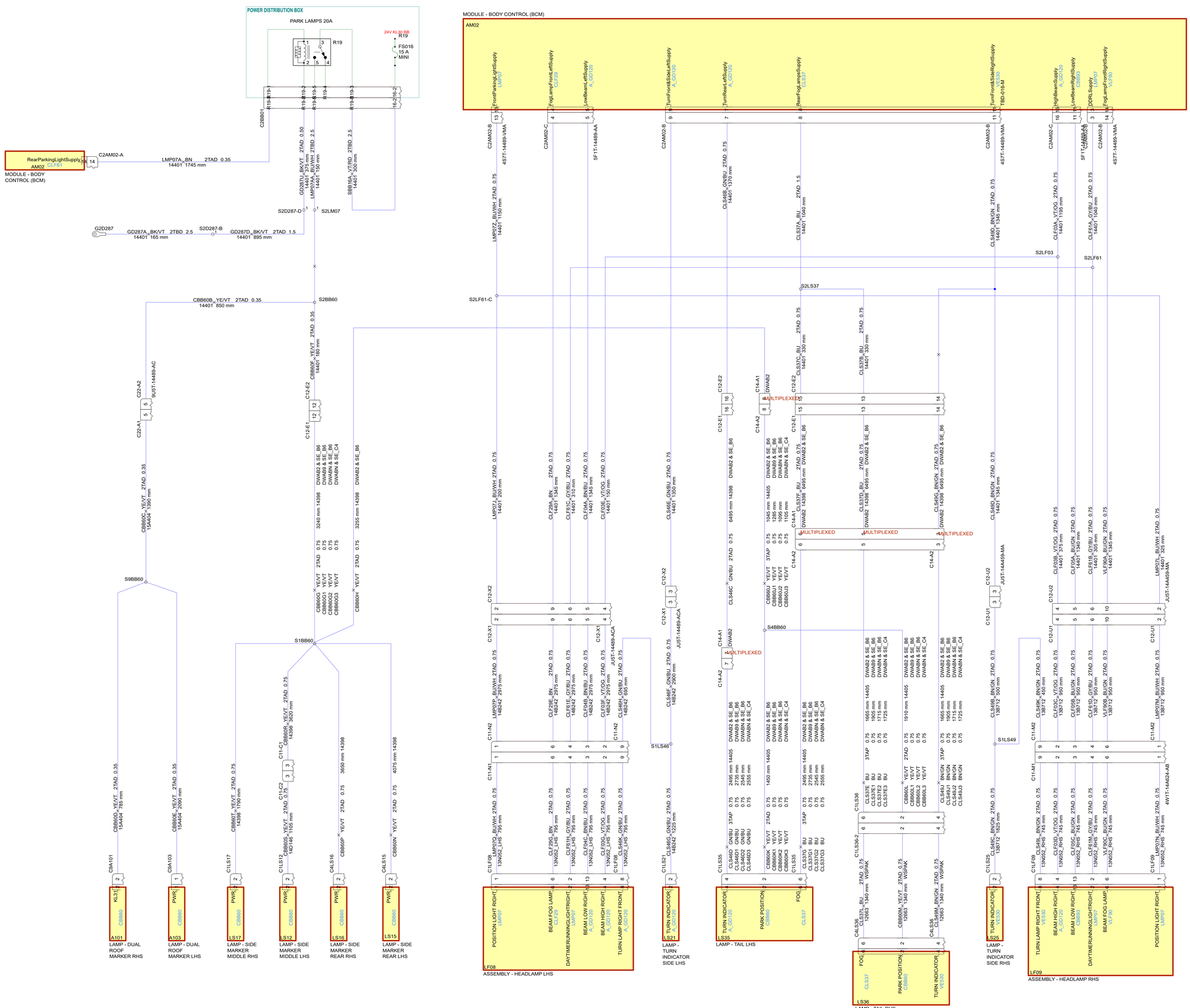

REFERENCE	N/A
PART MUST COMPLY WITH RESTRICTED SUBSTANCE MANAGEMENT STANDARD WSS-M99P9999 A1 TO SAFEGUARD HEALTH SAFETY AND THE ENVIRONMENT	
DRAFTED IN ACCORDANCE WITH FORD MOTOR COMPANY ENGINEERING CAD AND DRAFTING STANDARDS VERSION 00.0	3RD ANGLE PROJ DIMENSIONS ARE IN MILLIMETERS
CAD TYPE: X-E3	CAD LOC.:
CAD FILE: PHJC46-70C001-A6	DTM: IS MASTER
OPER NO.: N/A	UNIT: N/A
DRAWING	SIZE: A0
DESIGN: sakay	DETAIL: -----
TITLE: H625 - 2019 LP3 Design BODY CONTROL MODULE (BCM)	SHT 1 OF 1
CHECKED: -----	SAFETY: MFG USE
SCALE: N/A	DATE: 20170106
DIVISION: EESE	
PLANT: N/A	

PRINTED COPIES ARE UNCONTROLLED

H625 2019 LP3 Design
C2.02 GROUNDING STRATEGY - INSTRUMENT PANEL

LTRS	REVISIONS		
ORIGINATOR	CHECKER	ENGR APP	MATL APP

C2BB01
R7-2 GD287E BK/VT 2TAD 0.50 14401 450 mm
R5-2 GD287AG BK/VT 2TAD 0.50 14401 450 mm
R4-2 GD287Z BK/VT 2TAD 0.50 14401 450 mm
R1-2 GD287F BK/VT 2TAD 0.50 14401 450 mm AGCAA
R2-2 GD287G BK/VT 2TAD 0.50 14401 450 mm AGCAA
R6-2 GD287L BK/VT 2TAD 0.50 14401 450 mm
R11-2 GD287P BK/VT 2TAD 0.50 14401 450 mm
R15-2 GD287Q BK/VT 2TAD 0.50 14401 450 mm
R19-2 GD287U BK/VT 2TAD 0.50 14401 375 mm
R20-2 GD287V BK/VT 2TAD 0.50 14401 375 mm B3MAB
R21-2 GD287W BK/VT 2TAD 0.50 14401 375 mm
R24-2 GD287Y BK/VT 2TAD 0.50 14401 375 mm
R25-2 GD287AA BK/VT 2TAD 0.50 14401 375 mm B3MAB
R27-2 GD287AE BK/VT 2TAD 0.50 14401 375 mm
R23-2 GD287AZ BK/VT 2TAD 0.50 14401 375 mm
JU5T-14D089-BA
S2D287-C
GD287C BK/VT 2TAD 1.5 14401 820 mm
S2D287-D
GD287D BK/VT 2TAD 1.5 14401 895 mm
S2D287-B

LAMP - STOWAGE BOX BED LHS — LN15D GD237 KL31 2 — C9LN15D_B — GD238AL BK/WH 2TAD 0.35 19B516_LHS 210 mm — F5VB-14489-EA — C9LN15D_A — DU5T-14A459-HA — C9LN15D — GD238AG BK/WH 2TAD 0.35 15A404 1290 mm — DU5T-14489-ABA
LAMP - STOWAGE BOX BED RHS — LN15F GD237 KL31 2 — C9LN15F_B — GD238AN BK/WH 2TAD 0.35 19B516 — F5VB-14489-EA — C9LN15F_A — DU5T-14A459-HA — C9LN15F — GD238AH BK/WH 2TAD 0.35 15A404 315 mm — DU5T-14489-ABA
LAMP - STOWAGE BOX BED — LN15E GD237 KL31 2 — C9LN15E_B — GD238AM BK/WH 2TAD 0.35 19B516 — F5VB-14489-EA — C9LN15E_A — DU5T-14A459-HA — C9LN15E — GD238AJ BK/WH 2TAD 0.35 15A404 750 mm — DU5T-14489-ABA
S9D238-F
GD238AK BK/WH 2TAD 0.75 15A404 2600 mm

HRN-15B594
LAMP - STOWAGE BOX OHC — LN15A GD237 KL31 2 — C9LN15-A — GD238AD BK/WH 2TAD 0.35 15B594 570 mm — HRN-15B594
LAMP - STOWAGE BOX OHC — LN15C GD237 KL31 2 — C9LN15-C — GD238AE BK/WH 2TAD 0.35 15B594 1065 mm — HRN-15B594
LAMP - STOWAGE BOX OHC — LN15B GD237 KL31 2 — C9LN15-B — GD238AF BK/WH 2TAD 0.35 15B594 435 mm — HRN-15B594
S9D238-E
GD238AC BK/WH 2TAD 0.75 15B594 1230 mm
C99-A2 42 42 C99-A1
GD238AB BK/WH 2TAD 0.75 15A404 660 mm
S9D238-C
GD238AA BK/WH 2TAD 0.75 15A404 1975 mm
C22-A1 19 19 C22-A2
9U5T-14489-AC

SWITCH - HAZARD — LS32 GD237 KL31 2 — C2LS32 — GD238AQ BK/WH 2TAD 0.35 14401 835 mm
SENSOR - RAIN — RW06 GD237 KL31 2 — C2RW06 — GD238V BK/WH 2TAD 0.75 14401 2085 mm
SWITCH - HEADLAMP — LF23 GD237 KL31 7 — C2LF23 — GD238AP BK/WH 2TAD 0.75 14401 1410 mm
CLOCKSPRING — R115 GD237 KL31 (SW ILL/HORN GND) 9 — C2R115 — GD238Q BK/WH 2TAD 0.75 14401 1380 mm
S2D238-D
GD238AZ BK/WH 2TAD 0.75 14401 505 mm
GD238Z BK/WH 2TAD 0.75 14401 1740 mm

RADIO — ME03A GD284 KL31 4 — C2ME03A-A — GD284A BK/GY 2TBD 2.5 14401 865 mm — HU5T-14489-LB
GD284 — G2D284 p1 — 8V5T-14463-AHA
GD287A BK/VT 2TBD 2.5 14401 165 mm
D287 — G2D287 p1 — 8V5T-14463-AHA p2

SWITCH - DOOR LOCK LHS — PL42 GD237 KL31 (SW GND) 3 — C5PL42 — GD238M BK 2TAD 0.75 14A584 500 mm — 4L3T-14A464-MA — S5D238-B — GD238K BK 2TAD 0.75 14A584 565 mm — C35-A2 13 1 C35-B1 — GD238J BK/WH 2TAD 0.75 14A005 1660 mm 8V5T-14489-VB — C33-A1 10 10 C33-A2 — GD238H BK/WH 2TAD 0.75 14401 1575 mm
SWITCH - POWER WINDOW & MIRRORS — PW10 GD237 KL31 4 — C5PW10 — GD238N BK 2TAD 0.75 14A584 665 mm
CTRL MOD. - CLIMATE # ELECTRIC A/C — H105 GD237 KL31 1 — C2H105-A — GD238D BK/WH 2TAD 0.75 19C603 240 mm — 9U5T-14489-PA — C22-H2 4 4 C22-H1 — GD238E BK/WH 2TAD 0.75 14401 550 mm
SWITCH - DOOR LOCK RHS — PL15 GD237 KL31 (SW GND) 3 — C6PL15 — GD238F BK 2TAD 0.75 14K138 510 mm — S6D238-A — GD238C BK 2TAD 0.75 14K138 560 mm — C36-A2 14 2 C36-B1 — GD238B BK/WH 2TAD 0.75 14014 460 mm 8V5T-14489-VB — C33-B1 12 12 C33-B2 — GD238A BK/WH 2TAD 0.75 14401 1865 mm
SWITCH - POWER WINDOW RHS — PW19 GD237 KL31 1 — C6PW19 — GD238G BK 2TAD 0.75 14K138 640 mm
S2D238-G
GD238AY BK/WH 2TBD 2.5 14401 255 mm

MOTOR - CABIN TILTING — ZA350 GD286 KL31 2 2 — C1A350 — C1A350-A — B_GD286B BK/BU 3TBD 4.0 13B712 1795 mm A3AAM — C12-W1 4 4 C12-W2 — B_GD286C BK/BU 3TBD 4.0 14401 600 mm
R6-4 B_GD286AF BK/BU 2TAD 0.75 14401 925 mm
R27-4 B_GD286AC BK/BU 2TAD 0.75 14401 925 mm
S2D286-B
B_GD286E BK/BU 3TBD 6.0 14401 510 mm

ASSEMBLY - MIRROR RHS — PM31 B_GD286 KL31 1 PIGTAIL — C6PM31-1 — B_GD286AK BK 2TAD 0.75 14K138 800 mm — C36-A2 22 10 C36-B1 — B_GD286AJ BK/BU 2TAD 0.75 14014 460 mm 8V5T-14489-VB — C33-B1 32 32 C33-B2 — B_GD286AH BK/BU 2TAD 0.75 14401 515 mm 9U5T-14489-AC
ASSEMBLY - MIRROR LHS — PM26 B_GD286 KL31 1 PIGTAIL — C5PM26-1 — B_GD286AN BK 2TAD 0.75 14A584 800 mm — C35-A2 31 6 B_GD286AM BK/BU 2TAD 0.75 14A005 1660 mm 8V5T-14489-XB — C33-A1 39 39 C33-A2 — B_GD286AL BK/BU 2TAD 0.75 14401 1135 mm 9U5T-14A459-BC 9U5T-14489-AC
MODULE - EBS — A_GD286 CB01 KL31 11 12 — C1CB01-A — A_GD286D BK/BU 2TBD 2.5 14398 2300 mm — A_GD286C BK/BU 2TBD 2.5 14398 2300 mm — FU5T-14489-DAA
S1D286-A
A_GD286B BK/BU 2TBD 4.0 14398 2335 mm
C12-A1 11 11 C12-A2
A_GD286A BK/BU 2TBD 4.0 14401 1110 mm
D286 — A_G2D286 p1 — 8V5T-14463-AKA — B_G2D286 p2 — 8V5T-14463-AHA

HRN-13N850_LHS
HEATER - WINDSHIELD 1 — RD10 GD233 KL31 CT992 TBD-001-M 1 — C2RD10-B — 78GG-14488-SA — GD233A BK 3TBD 2.5 13N850_LHS 205 mm — G9D233 p1 — GD233
HRN-13N850_RHS
HEATER - WINDSHIELD 2 — RD11 GD133 KL31 CT993 TBD-001-M 1 — C2RD11-B — 78GG-14488-SA — GD133A BK 3TBD 2.5 13N850_RHS 225 mm — G9D133 p1 — D234

8V5T-14463-AHA — G2D238 p1 — D238

UNIT - POWER LATCH RHS — PL64 GD237 KL31 (DOOR AJAR SW GND) 1 — C6PL64-B — GD237V BK 2TAD 0.75 14K138 1860 mm — C36-A2 23 11 C36-B1 — GD237Y BK/WH 2TAD 0.75 14014 460 mm 8V5T-14489-VB — C33-B1 30 30 C33-B2 — GD237Z BK/WH 2TAD 0.75 14401 870 mm
KL31 6 — C6PL64-A — GD237Q BK 2TAD 0.75 14K138 1935 mm — 21 9 C36-B1 — GD237J BK/WH 2TAD 0.75 14014 460 mm 8V5T-14489-VB — C33-B1 29 29 — GD237K BK/WH 2TAD 0.75 14401 870 mm 9U5T-14489-AC
UNIT - POWER LATCH LHS — PL63 GD237 KL31 (DOOR AJAR SW GND) 3 — C5PL63-B — GD237S BK 2TAD 0.75 14A584 1860 mm — C35-A2 25 12 C35-C1 — GD237T BK/WH 2TAD 0.75 14A005 1660 mm 8V5T-14489-XB — C33-A1 43 43 C33-A2 — GD237U BK/WH 2TAD 0.75 14401 1130 mm 9U5T-14A459-BC
KL31 2 — C5PL63-A — GD237R BK 2TAD 0.75 14A584 1935 mm — C35-A2 26 11 C35-C1 — GD237M BK/WH 2TAD 0.75 14A005 1660 mm — C33-A1 28 28 C33-A2 — GD237N BK/WH 2TAD 0.75 14401 1130 mm 9U5T-14489-AC
POWER OUTLET - 12V — DC07-C GD237 KL31 1 — C2DC07-C — GD237E BK/WH 2TBD 2.5 14401 1325 mm
POWER OUTLET - 12V BED — DC07-B GD237 KL31 1 — C2DC07-B — GD237A BK/WH 2TBD 2.5 14A005 6585 mm — C33-A1 31 31 C33-A2 — GD237B BK/WH 2TBD 2.5 14401 1130 mm 9U5T-14A459-BC 9U5T-14489-AC
S2D237-A
GD237P BK/WH 2TBD 4.0 14401 155 mm
G2D237 p1 — D237

REFERENCE			
PART MUST COMPLY WITH RESTRICTED SUBSTANCE MANAGEMENT STANDARD WSS-M99P9999 A1 TO SAFEGUARD HEALTH SAFETY AND THE ENVIRONMENT			
DRAFTED IN ACCORDANCE WITH FORD MOTOR COMPANY ENGINEERING CAD AND DRAFTING STANDARDS VERSION 27.0		3RD ANGLE PROJ DIMENSIONS ARE IN MILLIMETERS	
CAD TYPE X-E3	CAD LOC. -----	CAD FILE PHJC46-70C021-A1	DTM IS MASTER
OPER NO. -----	UNIT -----	DRAWING	SIZE A1
DESIGN fkarade3	DETAIL -----	TITLE: H625 - 2019 LP3 Design GROUNDING - INSTRUMENT PANEL	SHT 1 OF 1
CHECKED -----	SAFETY -----		
SCALE NTS	DATE 20120101	DIVISION: EESE	
		PLANT: -----	

Modified By: NYAYLA1
Date Changed: 12/5/2019

H625 2019 LP3 Design
C2.02 GROUNDING STRATEGY - INSTRUMENT PANEL

LTRS	REVISIONS		
ORIGINATOR	CHECKER	ENGR APP	MATL APP

S2D285-A
A_GD285B_BK/WH_2TAD_0.75 14401" 400 mm
A_GD285C_BK/WH_2TAD_0.75 14401" 400 mm
A_GD285D_BK/WH_2TAD_1.5 14401" 205 mm
C2AM02-F 43 ElectronicGnd A_GD285
C2AM02-F 23 Electronic2Gnd
C2AM02-B 12 CON3 PowerGnd A_GD285 AM02
4S7T-14489-VMA
MODULE - BODY CONTROL (BCM)

B_GD285L_BK/WH_2TAD_0.75 14401" 770 mm
C12-V2 2 C12-V1 2
B_GD285P_BK/WH_2TAD_0.75 13B712" 1585 mm
C11-R1 6 C11-R2 6
B_GD285O_BK/WH_2TAD_0.75 13B767" 655 mm FBFAH
C1MF01 5 KL31 #2744 MF01
MODULE - RADAR

B_GD285B_BK/WH_2TBD_2.5 14401" 310 mm
C2MC39-A 2 KL31 #2744 MC39
MODULE - TIRE PRESSURE MONITORING SYSTEM (TPMS)

B_GD285C_BK/WH_2TAD_0.50 14401" 1440 mm
C2MC25-A 1 CT832 COMMON END #2744 MC25
SWITCH - PARKING BRAKE

B_GD285D_BK/WH_2TAD_0.35 14401" 1860 mm
C2MP41-A H KL31 #2744 MP41
JU5T-14489-SA
CAMERA FORWARD LOOKING

S2D285-B
A_GD285 A_GD285A_BK/WH_2TBD_4.0 14401" 755 mm 8V5T-14463-AHA P1
B_GD285 B_GD285A_BK/WH_2TBD_2.5 14401" 385 mm 8V5T-14463-AKA P2
D285

CONNECTOR - AFTERMARKET CABIN B_GD215 AH02 KL31 4 C2AH02
KL31 16 C2AH02
B_GD215E_BK/GY_2TAD_1.0 14401" 1690 mm
B_GD215D_BK/GY_2TAD_1.0 14401" 1690 mm

POWER OUTLET - 24V IP B_GD215 DC07-A KL31 3 C2DC07-A
B_GD215C_BK/GY_2TBD_2.5 14401" 255 mm

CIGAR LIGHTER B_GD215 DC15 KL31 3 C2DC15
AGCAA 4S7T-14489-BC
B_GD215B_BK/GY_2TBD_2.5 14401" 225 mm AGCAA
S2D216-A
B_GD215A_BK/GY_2TBD_6.0 14401" 570 mm

MODULE - WET TYPE FUEL FIRED HEATER A_GD215 A267 KL31 2 A2
PIGTAIL 2 2 C1A287
A_GD215F_BK/GY_2TBD_2.5 13B711" 500 mm GZDAE
HRN-13B767

HORN B_GD215 RH02 KL31 2
A_GD215M_BK/GY_2TAD_0.75 13B767" 170 mm
S1D215-C Splice-1 PHJC46-70C0D-A:B12
A_GD215G_BK/GY_2TAD_0.75 13B767" 135 mm
C11-S2 8 C11-S1 8
JU5T-14A624-KA
C11-R2 14 C11-R1 14
A_GD215E_BK/GY_2TBD_2.5 13B712" 730 mm GZDAE
A_GD215C_BK/GY_2TAD_0.75 13B712" 645 mm
S1D215-A
A_GD215B_BK/GY_2TBD_4.0 13B712" 980 mm
C12-W1 8 C12-W2 8
A_GD215A_BK/GY_2TBD_4.0 14401" 1810 mm

PUMP - RESIDUAL WATER A412 GD215 KL31 1 C1A412
A_GD215L_BK/GY_3TAP_0.75 13B712" 305 mm GZHAB
S1D215-B
A_GD215D_BK/GY_2TAD_0.75 13B712" 660 mm GZHAB

MODULE - BLOWER SPEED CONTROL H102-A GD215 KL31 2 C2H102-B
TBD-004-F
A_GD215K_BK/GY_2TBD_2.5 19F561" 620 mm
C22-G1 21 C22-G2 21
A_GD215H_BK/GY_2TBD_2.5 14401" 945 mm
S2D215-B
A_GD215J_BK/GY_2TBD_4.0 14401" 315 mm 8V5T-14463-AMA P1
B_GD215A_BK/GY_2TBD_6.0 14401" 570 mm 8V5T-14463-AHA P2
D215

SWITCH - AUXILIARY HEATER IP (DRY) A391 GD214 COMMON GND 3 JU5T-14489-AZA
A_GD214M_BK/BU_2TAD_0.35 14A320_LHS" 175 mm

SWITCH - AUXILIARY HEATER IP (DRY+WET) A393 GD214 INPUT 2 5 GND 3 INPUT 1 1 JU5T-14489-AZA C2A393
A_GD214F_BK/BU_2TAD_0.35 14A320_LHS" 175 mm
A_GD214P_BK/BU_2TAD_0.35 14A320_LHS" 175 mm
A_GD214H_BK/BU_2TAD_0.35 14A320_LHS" 175 mm

SWITCH - POWER TAKE OFF (PTO) E912 GD214 COMMON GND 3 JU5T-14489-ARA C2E912
A_GD214L_BK/BU_2TAD_0.35 14A320_LHS" 135 mm

SWITCH - TRAILER BRAKE A390 GD214 INPUT 1 4 DIMMING GND 6 TBD-006-M JU5T-14489-AXA C2A390
A_GD214K_BK/BU_2TAD_0.35 14A320_LHS" 150 mm
A_GD214BB_BK/BU_2TAD_0.35 14A320_LHS" 150 mm

SWITCH - LOW LINER AH11 GD214 INPUT 1 1 GND 3 INPUT 2 5 PHJC46-70C000-A5:H3 C2AH11
A_GD214R_BK/BU_2TAD_0.35 14A320_LHS" 135 mm
A_GD214J_BK/BU_2TAD_0.35 14A320_LHS" 135 mm
A_GD214T_BK/BU_2TAD_0.35 14A320_LHS" 135 mm

SWITCH - TRAILER TAG AXLE LIFTER A385 GD214 GND 3 C2A385
A_GD214G_BK/BU_2TAD_0.35 14A320_LHS" 105 mm

VALVE-BRAKE LOCKING A416 GD214 SWITCH - ACCESSORY TWO (ACC2) KL31 2 C1939 TBD-002-M C2CA50
GD214AA_BK/BU_2TAD_0.75 14401" 800 mm HKSAC
LAMP 4S7T-14489-VAA

SWITCH - ACCESSORY (WORK) A420 GD214 GND 3 TBD-004-F C2A420
GD214AY_BK/BU_2TAD_0.50 14401" 1245 mm
JU5T-14489-AVA

SENSOR - LOW COOLANT LEVEL A_GD214 KL31 MC21 1 C1MC21
GD214BC_BK/BU_2TAD_0.75 15A808" 795 mm
5L55-14A464-EA
C12-G1 14 14 C12-G2
EU5T-14489-DB EU5T-14A459-DC
GD214BD_BK/BU_2TAD_0.75 14401" 1545 mm

SWITCH - MANUEVERING A190 GD214 COMMON GND 3 C2A190
A_GD214BA_BK/BU_2TAD_0.35 14A320_RHS" 150 mm

SWITCH - AUTOMATIC TRANSMISSION POWER / ROCKING (AMT) A176 GD214 INPUT 1 1 GND 3 INPUT 2 5 C2A176
A_GD214AP_BK/BU_2TAD_0.35 14A320_RHS" 150 mm
A_GD214Y_BK/BU_2TAD_0.35 14A320_RHS" 150 mm
A_GD214Z_BK/BU_2TAD_0.35 14A320_RHS" 150 mm

SWITCH - BLENDING A368 GD214 COMMON GND 3 C2A388
A_GD214U_BK/BU_2TAD_0.35 14A320_RHS" 190 mm

SWITCH - HILL HOLDER A389 GD214 INPUT 1 3 DIMMING GND 6 TBD-008-M JU5T-14489-AYA C2A389
A_GD214V_BK/BU_2TAD_0.35 14A320_RHS" 190 mm
A_GD214BC_BK/BU_2TAD_0.35 14A320_RHS" 190 mm

SWITCH - DIFFERENTIAL LOCK A369 GD214 COMMON GND 3 C2A369
A_GD214S_BK/BU_2TAD_0.35 14A320_RHS" 190 mm

SWITCH - MAP READING LAMP (IP) LN12 GD214 C1975 INPUT 1 1 GND 3 INPUT 2 5 TBD-008-M JU5T-14489-AZA C2LN12
GD214AW_BK/BU_2TAD_0.35 14A320_RHS" 120 mm
GD214AV_BK/BU_2TAD_0.35 14A320_RHS" 120 mm
GD214AX_BK/BU_2TAD_0.35 14A320_RHS" 120 mm

SWITCH - ACTIVE EMERGENCY BRAKING A199 GD214 GND 3 C2A199
A_GD214W_BK/BU_2TAD_0.35 14A320_RHS" 135 mm

SWITCH - LANE DEPARTURE WARNING SYSTEM RB05 GD214 GND 3 INPUT 1 6 C2RB05
A_GD214X_BK/BU_2TAD_0.35 14A320_RHS" 135 mm
A_GD214AN_BK/BU_2TAD_0.35 14A320_RHS" 135 mm

SWITCH - DIESEL PARTICULATE REGENERATIVE / INHIBITOR (DPF) E702 GD214 INPUT 1 1 GND 3 INPUT 2 5 C2E702
A_GD214J_BK/BU_2TAD_0.35 14A320_RHS" 205 mm
A_GD214Q_BK/BU_2TAD_0.35 14A320_RHS" 205 mm
A_GD214AL_BK/BU_2TAD_0.35 14A320_RHS" 205 mm

SWITCH - ELECTRONIC STABILITY PROGRAM (ESP) A396 GD214 GND 3 C2A396
A_GD214AA_BK/BU_2TAD_0.35 14A320_RHS" 135 mm

S2D214-F
A_GD214AS_BK/BU_2TAD_0.75 14A320_LHS" 180 mm
A_GD214AR_BK/BU_2TAD_0.75 14A320_LHS" 60 mm
S2D214-G
A_GD214AU_BK/BU_2TAD_0.75 14A320_RHS" 65 mm
S2D214-J
C22-D1 9 C22-D2 9
A_GD214AT_BK/BU_2TAD_0.75 14A320_RHS" 180 mm
S2D214-A
A_GD214AQ_BK/BU_2TAD_0.75 14401" 175 mm
A_GD214AP_BK/BU_2TAD_0.75 14401" 620 mm
S2D214-H
A_GD214AO_BK/BU_2TAD_0.75 14401" 175 mm
A_GD214AN_BK/BU_2TAD_0.75 14401" 620 mm
S2D214-D
A_GD214AB_BK/BU_2TAD_0.75 14A320_RHS" 130 mm
C22-C1 4 C22-C2 4

C22-A2 18 C22-A1 18
9U5T-14489-AC
A_GD214N_BK/BU_2TAD_0.75 15A404" 2635 mm
C99-A1 27 C99-A2 27
A_GD214AF_BK/BU_2TAD_0.75 15B594" 850 mm
S9D214-E
A_GD214AG_BK/BU_2TAD_0.35 15B594" 235 mm
C9A170 3 GND A_GD214 A170 SWITCH - AJAR ON/OFF OHC
A_GD214AK_BK/BU_2TAD_0.35 15B594" 240 mm
C9A187 3 GND A_GD214 A187 SWITCH - DOME & AMBIENT LAMPS OHC
A_GD214AV_BK/BU_2TAD_0.35 15B594" 270 mm
C9A320 3 GND A_GD214 A320 HRN-15B594 SWITCH - TRIPLE ROOF MARKER LAMPS
A_GD214AY_BK/BU_2TAD_0.35 15B594" 235 mm
C9A292 3 GND A_GD214 A292 SWITCH - SUNBLIND
A_GD214AZ_BK/BU_2TAD_0.35 15B594" 220 mm
C9PR40-A 3 GND A_GD214 PR40A SWITCH - SUNROOF OHC

B_GD214C_BK/BU_2TAD_0.35 14401" 1270 mm
C2RB11 1 KL31 BUZZER RHS (LDWS)
B_GD214G_BK/BU_2TAD_0.35 14401" 990 mm
C2RB10 1 KL31 BUZZER LHS (LDWS)
B_GD214E_BK/BU_2TAD_0.35 14401" 685 mm
C2RT23 2 KL31 (TPAT) MODULE - PATS
B_GD214F_BK/BU_2TAD_0.75 14401" 510 mm
C2DB04-A 4 CT939 KL31 TBD-016-M CONNECTOR - ON BOARD DIAGNOSTIC (OBD) - 1
B_GD214H_BK/BU_2TAD_0.75 14401" 1275 mm HKSAC
B_GD214K_BK/BU_2TAD_0.75 14401" 1275 mm HKSAC 8V5T-14489-APA
C2DB04-B 4 5 CT985 MS CAN - #2744 TBD-016-M #2744 DB04-B CONNECTOR - ON BOARD DIAGNOSTIC (OBD) - 2
B_GD214J_BK/BU_2TAD_0.35 14401" 620 mm HKSAC HKSAC
C2AM05 28 24 KL31 MODULE - ERA GLONASS
B_GD214B_BK/BU_2TAD_0.75 14401" 1025 mm
B_GD214D_BK/BU_2TAD_0.75 14401" 1025 mm
JU5T-14489-PA
C2MC01-A 13 KL31
C2MC01-A 29 24 KL31 MC01 INSTRUMENT CLUSTER
B_GD214M_BK/BU_2TAD_1.0 14401" 940 mm
C2X209 8 KL31 #2744 X209 SWITCH - MULTIFUNCTION STALK - MFS
2L1T-14A464-JA

A_GD214 A_GD214AC_BK/BU_2TBD_4.0 14401" 620 mm 8V5T-14463-AHA P1
B_GD214 A_GD214A_BK/BU_2TBD_4.0 14401" 620 mm 8V5T-14463-AKA P2
D214
B_GD214A_BK/BU_2TBD_2.5 14401" 245 mm
S2D214-C
B_GD214L_BK/BU_2TBD_2.5 14401" 190 mm
S2D214-B

LAMP - DUAL ROOF MARKER RHS A101 #2688 PWR 1 C9A101
GD216S_BK/VT_2TAD_0.35 15A404" 2275 mm
LAMP - DUAL ROOF MARKER LHS A103 #2688 KL31 2 C9A103
GD216T_BK/VT_2TAD_0.35 15A404" 600 mm
LAMP - TRIPLE ROOF MARKER LHS LS28 #2688 KL31 3 C9LS28 JBPAH
GD216U_BK/VT_2TAD_0.75 15A404" 1160 mm JBPAH
LAMP - TRIPLE ROOF MARKER RHS LS33 #2688 KL31 3 C9LS33 JBPAH F3LB-14489-MA
GD216V_BK/VT_2TAD_0.75 15A404" 1730 mm JBPAH
LAMP - TRIPLE ROOF MARKER CENTER LS52 #2688 KL31 3 C9LS52 JBPAH
GD216Y_BK/VT_2TAD_0.75 15A404" 1420 mm JBPAH
S9D216-D
GD216H_BK/VT_2TAD_0.75 15A404" 2680 mm

ASSEMBLY - HEADLAMP RHS LF09 #2688 TBD-018-M
GND 3 C1LF09
GND 14
GND 5
GND 7
GND 11
GND 9
C1LF09
JU5T-14A464-HAA
S1D216-B
GD216J_BK/VT_2TAD_0.75 13N052_RHS" 340 mm
GD216M_BK/VT_2TAD_0.75 13N052_RHS" 340 mm
GD216P_BK/VT_2TAD_0.75 13N052_RHS" 340 mm
GD216R_BK/VT_2TAD_0.75 13N052_RHS" 340 mm
GD216N_BK/VT_2TAD_0.75 13N052_RHS" 340 mm
GD216AH_BK/VT_2TAD_0.75 13N052_RHS" 340 mm
GD216K_BK/VT_2TAD_0.75 13N052_RHS" 405 mm
4W1T-14A624-AB
C11-M1 7 C11-M2 7
93472-1287 Molex CSA
GD216L_BK/VT_2TAD_0.75 13B712" 350 mm

LAMP - STEPWELL RHS LN70 #2688 KL31 1 C1LN70
GD216D_BK/VT_2TAD_0.75 13B712" 850 mm
COVER GU3A-14A626-AA
LAMP - TURN INDICATOR SIDE RHS LS25 #2688 KL31 1 C1LS25
GD216E_BK/VT_2TAD_0.75 13B712" 1725 mm
AU5T-14A464-PA

C22-A1 16 C22-A2 16
9U5T-14489-AC
GD216F_BK/VT_2TAD_0.75 14401" 490 mm
C22-A2 17 C22-A1 17
9U5T-14489-AC
GD216Z_BK/VT_2TAD_0.75 15A404" 2215 mm
S9D216-E
GD216G_BK/VT_2TAD_0.75 14401" 490 mm
GD216AA_BK/VT_2TAD_0.35 15A404" 1960 mm
GD216AB_BK/VT_2TAD_0.35 15A404" 1960 mm
GD216AC_BK/VT_2TAD_0.35 15A404" 1960 mm
GD216AD_BK/VT_2TAD_0.35 15A404" 2715 mm
GD216AE_BK/VT_2TAD_0.35 15A404" 2715 mm
GD216AF_BK/VT_2TAD_0.35 15A404" 2715 mm
GD216AG_BK/VT_2TAD_0.35 15A404" 490 mm
C9LN02 2 KL31 #2688
C9LN02 4 KL31 #2688
C9LN02 6 KL31 #2688 LN02 LAMP - INTEGRATED DOME LHS
C9LN06 2 KL31 #2688
C9LN06 4 KL31 #2688
C9LN06 6 KL31 #2688 LN06 LAMP - INTEGRATED DOME RHS
C9LN19A 2 KL31 (AJAR OUT) #2688 LN19A LAMP - MULTIFUNCTIONAL DOME

S1D216-A
B_GD216B_BK/VT_2TBD_2.5 13B712" 620 mm
C12-W1 3 C12-W2 3
GD216A_BK/VT_2TBD_2.5 14401" 620 mm
S2D216-C
GD216C_BK/VT_2TBD_2.5 14401" 410 mm
G2D216 P1
D216

REFERENCE N/A		
PART MUST COMPLY WITH RESTRICTED SUBSTANCE MANAGEMENT STANDARD WSS-M99P9999 A1 TO SAFEGUARD HEALTH SAFETY AND THE ENVIRONMENT		
DRAFTED IN ACCORDANCE WITH FORD MOTOR COMPANY ENGINEERING CAD AND DRAFTING STANDARDS VERSION 27.0		3RD ANGLE PROJ DIMENSIONS ARE IN MILLIMETERS
CAD TYPE X-E3	CAD LOC. TCE	CAD FILE PHJC46-70C021-A2 DTM IS MASTER
OPER NO. N/A	UNIT N/A	DRAWING SIZE A0
DESIGN fkarade3	DETAIL -----	TITLE: H625 - 2019 LP3 Design GROUNDING - INSTRUMENT PANEL SHT 1 OF 1
CHECKED -----	SAFETY MFG USE	
SCALE NTS	DATE 20160427	DIVISION: EESE
		PLANT: N/A

PRINTED COPIES ARE UNCONTROLLED

H625 2019 LP3 Design
C2.03 GROUNDING STRATEGY - BODY

LTRS	REVISIONS		
ORIGINATOR	CHECKER	ENGR APP	MATL APP

REFRIGERATOR — A271 GD345 — KL31 1 — C2A271 1 — HTABJ | HTAAC 5W1T-14A624-AA — GD345B BK/BU 2TAD 0.75 14A005 1290 mm HTABJ | HTAAC — S2D345 — GD345C BK/BU 2TBD 2.5 14A005 615 mm HTABJ | HTAAC — G2D345 p1 8V5T-14463-AHA HTABJ | HTAAC — GD345

MODULE - DRY TYPE FUEL FIRED HEATER (FFH) — A272 GD238 — KL31 10 — C1A272 10 — A_GD343E BK/VT 2TBD 2.5 14A005 655 mm — JU5T-14A464-AJA — S2D301-B

BELT MINDER W/ HEATED SEAT LHS — HS04 GD238 — CT262 KL31 3 — C3HS04 3 — A_GD343H BK/VT 2TAD 0.75 14A005 700 mm — S2D301-B

BELT MINDER W/ HEATED SEAT LHS — HS04 GD238 — KL31 2 — C3HS04 2 — B_GD343B BK/VT 2TAD 0.75 14A005 755 mm — S2D301-A

UNIT - REMOTE CONTROL ECAS (RCU) — A182 GD238 — KL31 4 — HARNESS IS PROVIDED BY SUPPLIER — C2A182-1 4 4 — 7L1T-14A459-BA — B_GD343E BK/VT 2TAD 0.75 14A005 260 mm DWABN | DWAB9 — S2D301-A

LAMP - DOOR TRIM PUDDLE LHS — CLN31 GD238 — KL31 1 — HRN-14A584 — C5CLN31-B — B_GD343D BK 2TAD 0.75 14A584 1175 mm — C35-A2 32 5 C35-C1 — 8V5T-14489-XB — B_GD343C BK/VT 2TAD 0.75 14A005 1975 mm — S2D301-A

/PHJC46-70C142-A.E4

SWITCH - AUXILARY HEATER BED (DRY+WET) — A417 SBB45 — INPUT 1 1 — GND 3 3 — INPUT 2 5 5 — C4A417 — JU5T-14489-AZA — GD348J BK/YE 2TAD 0.35 14014 730 mm GZDAE — GD348N BK/YE 2TAD 0.35 14014 730 mm GZDAE — GD348P BK/YE 2TAD 0.35 14014 730 mm GZDAE

SWITCH - AUXILIARY HEATER BED (DRY) — A277 SBB45 — COMMON GND 3 — C2A277 — JU5T-14489-AZA — GD348G BK/YE 2TAD 0.35 14014 680 mm GZDAA

SWITCH - RADIO CONTROL BED — A278 SBB45 — INPUT 1 1 — GND 3 3 — INPUT 2 5 5 — C4A278 — JU5T-14489-BAA — GD348U BK/YE 2TAD 0.35 14014 660 mm — GD348F BK/YE 2TAD 0.35 14014 660 mm — GD348V BK/YE 2TAD 0.35 14014 660 mm

SWITCH - BED LIGHT & GLOBAL OFF BED — A186 SBB45 — GND 3 3 — INPUT 1 5 5 — C4A186 — JU5T-14489-BAA — GD348D BK/YE 2TAD 0.35 14014 710 mm — GD348T BK/YE 2TAD 0.35 14014 710 mm

SWITCH - SUNROOF BED — PR40B SBB45 — GND 3 — C4PR40B — JU5T-14489-AXA — GD348Q BK/YE 2TAD 0.35 14014 2470 mm

SWITCH - DOME & AMBIENT LAMPS BED — A185 SBB45 — GND 3 3 — C2A185 — GD348E BK/YE 2TAD 0.35 14014 2480 mm

LAMP - BED AREA — LN19B SBB45 — KL31 2 2 — C2LN19B — 3M5T-14489-BBA — GD348K BK/YE 2TAD 0.75 14014 2815 mm

LAMP - DOOR TRIM PUDDLE RHS — CLN32 SBB45 — KL31 1 — C6CLN32-B — GD348X BK 2TAD 0.75 14K138 1170 mm — C36-A2 32 5 C36-C1 — 8V5T-14489-XB — GD348W BK/YE 2TAD 0.75 14014 1350 mm

S4D348-A — GD348A BK/YE 2TAD 0.75 14014 2120 mm — S4D348-C — GD348L BK/YE 2TBD 2.5 14014 1685 mm — G2D348 p1 p2 8V5T-14463-AHA — GD348

S4D348-B — GD348B BK/YE 2TAD 0.75 14014 320 mm

MOTOR - WIPER — RW01 GD120 — KL31 1 — C1RW01 1 1 — B_GD120B BK/GN 3TAD 1.5 14B242 325 mm — JU5T-14A464-MAA

PUMP - WASHER — RW14 GD120 — KL31 2 — CT963 — 9U5T-14A464-KA — HARNESS IS PROVIDED BY SUPPLIER — B_GD120D BK/GN 2TAD 0.75 17A611 — C1RW14 2 2 — JU5T-14A624-NA — B_GD120C BK/GN 3TAP 0.75 14B242 155 mm — S1D120-B — B_GD120A BK/GN 2TBD 6.0 14B242 270 mm

LAMP - STEPWELL LHS — LN69 GD120 — KL31 1 — C1LN69 — A_GD120B BK/GN 2TAD 0.75 14B242 1000 mm — S1D120-A — A_GD120A BK/GN 2TBD 4.0 14B242 665 mm

LAMP - TURN INDICATOR SIDE LHS — LS21 GD120 — KL31 1 — C1LS21 — A_GD120C BK/GN 2TAD 0.75 14B242 1860 mm

ASSEMBLY - HEADLAMP LHS — LF08 TBD-018-M — GND 5 5 — GND 3 3 — GND 7 7 — GND 11 11 — GND 14 14 — GND 9 9 — C1LF08 — JU5T-14A464-HAA — A_GD120L BK/GN 2TAD 0.75 13N052_LHS 325 mm — A_GD120M1 BK/GN 2TAD 0.75 13N052_LHS 325 mm — A_GD120G BK/GN 2TAD 0.75 13N052_LHS 325 mm — A_GD120H BK/GN 2TAD 0.75 13N052_LHS 325 mm — A_GD120K BK/GN 2TAD 0.75 13N052_LHS 325 mm — A_GD120Z BK/GN 2TAD 0.75 13N052_LHS — S1D120-C — A_GD120F BK/GN 2TAD 0.75 13N052_LHS 470 mm — C11-N1 7 7 C11-N2 — A_GD120D BK/GN 2TAD 0.75 14B242 710 mm

LAMP - ACCESSORY (WORK) — A362 GD120 — KL31 2 — C1A362 — F2AAG 9U5T-14A624-VA — A_GD120J BK/GN 2TAD 0.75 14B242 2600 mm F2AAG

SWITCH - CABIN TILTING — ZA351 TBD-002-M — KL31 1 — CT190 — HARNESS IS PROVIDED BY SUPPLIER — C1ZA351 1 1 A3AAM — A_GD120N BK/GN 2TAD 0.75 14B242 1985 mm A3AAM

ROOF BEACON LAMP - 2 — TBD-002-M — CT1030 2 — JUMPER HARNESS — C14-B1 2 2 J3BAE JU5T-14A624-NA — A_GD120P BK/GN 2TAD 0.75 14B242 2465 mm J3BAE

B_GD343A BK/VT 2TBD 2.5 14A005 1105 mm — B_G2D343 p1 8V5T-14463-AKA — A_GD343G BK/VT 2TBD 2.5 14A005 1160 mm — A_G2D343 p2 8V5T-14463-AHA — D343

A_G1D120 p1 8V5T-14463-AKA — B_G1D120 p2 8V5T-14463-AHA — D120

REFERENCE

PART MUST COMPLY WITH RESTRICTED SUBSTANCE MANAGEMENT STANDARD WSS-M99P9999 A1 TO SAFEGUARD HEALTH SAFETY AND THE ENVIRONMENT

DRAFTED IN ACCORDANCE WITH FORD MOTOR COMPANY ENGINEERING CAD AND DRAFTING STANDARDS VERSION 27.0

3RD ANGLE PROJ
DIMENSIONS ARE IN MILLIMETERS

CAD TYPE	CAD LOC.	CAD FILE	DTM
X-E3	-----	PHJC46-70C022-A1	IS MASTER
OPER NO.	UNIT	DRAWING	SIZE
-----	-----		A1
DESIGN	DETAIL	TITLE: H625 - 2019 LP3 Design GROUNDING - BODY	SHT 1 OF 1
fkarade3	-----		
CHECKED	SAFETY		
-----	-----		
SCALE	DATE	DIVISION: EESE	
NTS	20120101	PLANT: -----	

Modified By: NYAYLA1
Date Changed: 10/3/2019

H625 2019 LP3 Design
C2.03 GROUNDING STRATEGY - BODY

LTRS	REVISIONS		
ORIGINATOR	CHECKER	ENGR APP	MATL APP

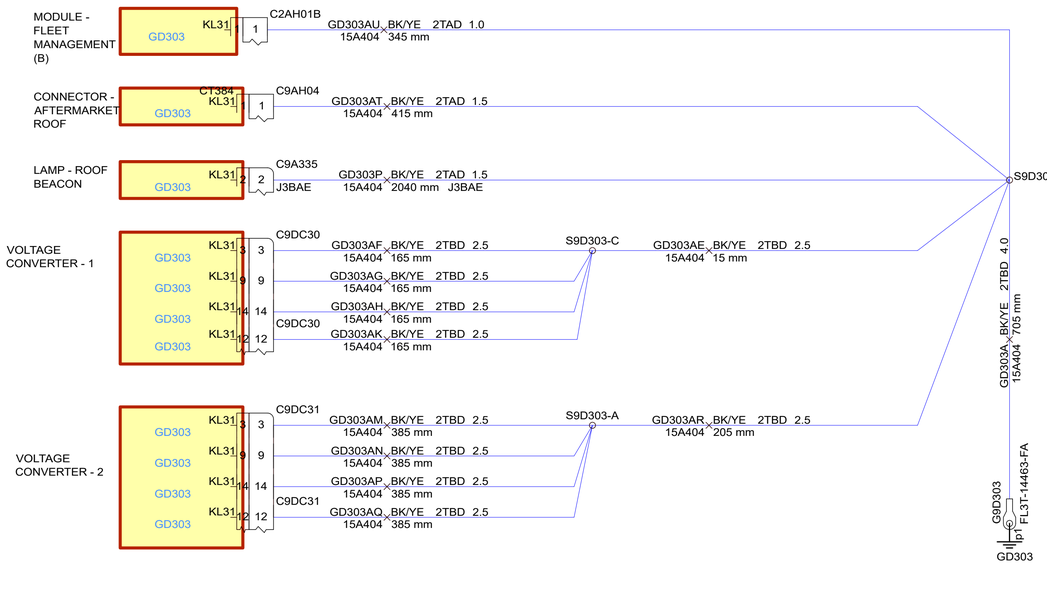

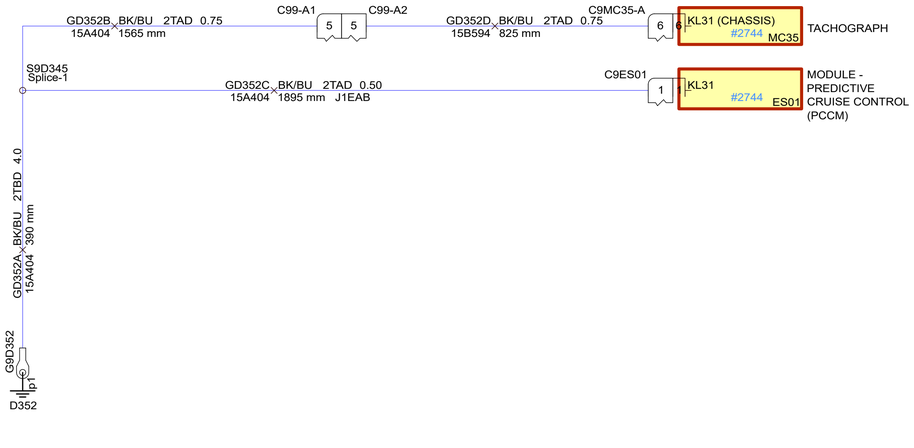

REFERENCE			
PART MUST COMPLY WITH RESTRICTED SUBSTANCE MANAGEMENT STANDARD WSS-M99P9999 A1 TO SAFEGUARD HEALTH SAFETY AND THE ENVIRONMENT			
DRAFTED IN ACCORDANCE WITH FORD MOTOR COMPANY ENGINEERING CAD AND DRAFTING STANDARDS VERSION 27.0			3RD ANGLE PROJ DIMENSIONS ARE IN MILLIMETERS
CAD TYPE X-E3	CAD LOC. TCE	CAD FILE PHJC46-70C022-A2	DTM IS MASTER
OPER NO. N/A	UNIT N/A	DRAWING	SIZE A1
DESIGN fkarade3	DETAIL -----	TITLE: H625 - 2019 LP3 Design GROUNDING - BODY	SHT 1 OF 1
CHECKED -----	SAFETY MFG USE		
SCALE NTS	DATE 20120101	DIVISION: EESE	
		PLANT: N/A	

Modified By: NYAYLA1
Date Changed: 1/23/2019

H625 2019 LP3 Design
C2.04 GROUNDING STRATEGY - FRAME

LTRS	REVISIONS		
ORIGINATOR	CHECKER	ENGR APP	MATL APP

LAMP - TAIL LHS — KL31 — LS35 GD406 — C1LS35 — 1
GD406B BK/YE 2TAD 1.5 1855 mm 14405 DWAB2 & SE_B6
GD406B1 BK/YE 1.5 DWAB9 & SE_B6
GD406B2 BK/YE 1.5 DWABN & SE_B6
GD406B3 BK/YE 1.5 DWABN & SE_C4

C1LS36-2 — 1 — WSPAK — 1 — C1LS36
GD406C BK/YE 2TAD 1.5 1505 mm 14405 DWAB2 & SE_B6
GD406C1 BK/YE 1.5 DWAB9 & SE_B6
GD406C2 BK/YE 1.5 DWABN & SE_B6
GD406C3 BK/YE 1.5 DWABN & SE_C4

S1D406
GD406A BK/YE 2TBD 4.0 780 mm 14405 DWAB2 & SE_B6
GD406A1 BK/YE 4.0 865 mm DWAB9 & SE_B6
GD406A2 BK/YE 4.0 830 mm DWABN & SE_B6
GD406A3 BK/YE 4.0 840 mm DWABN & SE_C4

GD406D BK/YE 2TAD 1.5 12663 680 mm WSPAK

LAMP - TAIL RHS — KL31 — LS36 GD406 — C4LS36 — 1 — WSPAK
GD406E BK/YE 2TAD 1.5 12663 660 mm WSPAK — S4D406

SOUNDER - BACKUP — CT1014 — MP09 GD406 — 2 — C4MP09 — 2 — WSPAK — TBD-002-M — TBD-002-F
BUZZER_WIRE- BK 2TAD 0.75 12663 1000 mm WSPAK

G1D406 — 1p1 — D406

LAMP - ACCESSORY (WORK) — CT983 — KL31 — A421 GD415 — TBD-002-F — 2 — 2
GD415K BK/VT 2TAD 0.75 F2ABK 14398 2140 mm F2ABK 9U5T-14A624-VA — C1A421

LAMP - SIDE MARKER MIDDLE RHS — KL31 — LS17 GD415 — 1 — C1LS17
GD415C BK/VT 2TAD 0.75 14398 2905 mm

LAMP - SIDE MARKER MIDDLE LHS — KL31 — LS12 GD415 — 1 — C1LS12
GD415Z BK/VT 2TAD 0.75 14D146 1105 mm — C11-C2 — 4 4 — C11-C1 — GD415D BK/VT 2TAD 0.75 14398 2505 mm

LAMP - SIDE MARKER REAR RHS — KL31 — LS16 GD415 — 1 — C4LS16
GD415E BK/VT 2TAD 0.75 14398 2535 mm

LAMP - SIDE MARKER REAR LHS — KL31 — LS15 GD415 — 1 — C4LS15
GD415F BK/VT 2TAD 0.75 14398 2960 mm — S1D415-A — GD415A BK/VT 2TBD 4.0 14398 1205 mm

CONNECTOR - AFTERMARKET CHASSIS — KL31-1 — KL31-2 — AH03 GD415 — 4 8 — C1AH03
GD415H BK/VT 2TAD 1.5 14398 520 mm
C1AH03 — GD415J BK/VT 2TAD 1.5 14398 520 mm — S1D415-B Splice-1 — GD415G BK/VT 2TBD 4.0 14398 700 mm

G1D415 — 1p1 — D415

VALVE - EGR & ACTUATOR - TURBO CHARGER GND — TBD-018-M — C11-A2 — 1 1 — HRN-14398 C11-A1
GD411G BK/BU 2TAD 1.5 14398 1460 mm

PUMP - DRY TYPE HEATER FUEL — KL31 — HF01A GD410 — 2 — C1HF01A — TBD-002-F
GD411Z BK/BU 3TAP 0.75 14398 755 mm — 1 — S1D411-C — GD411N BK/BU 2TAD 0.75 14398 330 mm

PUMP - WET TYPE HEATER FUEL — KL31 — HF01B GD410 — 2 — C1HF01B — 9U5T-14A464-KA
GD411AZ BK/BU 3TAP 0.75 14398 775 mm — 1 — S1D411-D — GD411P BK/BU 2TAD 0.75 14398 380 mm

HEATER - FUEL PREFILTER — CT487 — KL31 — E232 GD410 — TBD-002-M — 2 — A — C1E232
GD411H BK/BU 2TBD 2.5 14398 1270 mm

VALVE - 1-2 CHANNEL CENTRAL — KL31 — A223 GD410 — YC1T-14489-JA — 4 — C1A223
GD411L BK/BU 2TAD 0.75 2510 mm 14398 DWAB9
GD411L1 BK/BU 0.75 2160 mm DWABN

S1D411-B
GD411F BK/BU 2TBD 6.0 14398 620 mm

CONNECTOR - TRAILER 7-PIN ISO 7638 — HRN-14F502 — A23-A1 — KL31 ELECTRONIC MODULE (-) GD410 — KL31 MAGNETIC VALVE (-) GD410 — AT23-A — 3 4 — C1AT23-A
GD411M YE 3TAP 1.5 14F502 810 mm — C11-Z2 — 24 2 — C11-Z1 — GD411B BK/BU 2TAD 1.5 14398 255 mm
GD411S BN 3TAP 4.0 14F502 810 mm — 25 2 — GD411C BK/BU 2TBD 4.0 14398 255 mm
TBD-007-F — S1D411-A — GD411A BK/BU 2TBD 4.0 14398 540 mm

CONNECTOR - TRAILER 15-PIN — HRN-14F502 — KL31-1 — KL31-2 (DATA) GD410 — 4 13 — C1AT23-B
GD411T WH 3TAP 2.5 14F502 840 mm — 25 25 — GD411D BK/BU 2TBD 2.5 14398 255 mm
C1AT23-B — GD481Y BK/BU 3TAP 2.5 14F502 840 mm — C11-Z2 — 26 26 — GD481X BK/GN 2TBD 2.5 14398 585 mm
TBD-026-F — TBD-026-M

G1D411 — 1p1 — D411

SENSOR - NOX 1 (EU6) — CT62 — KL31-1 — KL31-2 — GD410 — E826A1 — 2 5 — C1E826A1
GD481N BK/GN 4TAP 0.75 9L430 165 mm DGAA7
GD481P BK/GN 4TAP 0.75 9L430 165 mm DGAA7

SENSOR - NOX 2 (EU6) — KL31 — E826B GD410 — 2 — C1E826B
GD481Q BK/GN 4TAP 0.75 9L430 245 mm DGAA7

S1D481-E
GD481G YE/GY 5TAD 1.0 9L430 145 mm DGAA7
C11-G2 — 18 18 — C11-G1
GD481F BK/GN 2TAD 1.5 14398 2525 mm DGAA7

SENSOR - UREA LEVEL & QUALITY (WEMA) — CT784 — KL31 (EU6) — E834 GD410 — TBD-004-M — 4 — C1E834
GD481M BK/GN 2TAD 0.75 14D378 475 mm DGAA7
C11-D2 — 4 4 — C11-D1 — JU5T-14A624-CA
GD481E BK/GN 2TAD 0.75 14398 445 mm DGAA7 — S1D481-D

SENSOR - NOX 1 (EU5) — KL31 — E826A2 GD410 — TBD-005-F — 2 — C1E826A2
GD481K BK/GN 3TAP 0.75 14398 1980 mm DGAB3

C11-A2 — SOLENOID - A/C CLUTCH COMPRESSOR GND PIN — TBD-018-M — 9 9 — HRN-14398 C11-A1 — JU5T-14A464-HAA
GD481R BK/GN 2TAD 0.75 14398 1240 mm

GD481U BK/GN 2TBD 2.5 14398 50 mm DGAA7

UNIT - ELECTRONIC AIR PROCESSING - E-APU — CT751 — KL31 — A402 GD410 — 8 — C1A402 — JU5T-14A464-CEA
GD481D BK/GN 2TAD 1.5 14398 1925 mm

UNIT - ADR — KL31 — A102 GD410 — 4 — C1A102-A
GD481B BK/GN 2TAD 0.75 14398 1095 mm AGCAB

S1D481-C

GD481X BK/GN 2TBD 2.5 14398 585 mm

KL31 (G_G_BAT1) GD481 — 3 — C1E115-A
KL31 (G_G_BAT4) GD481 — 5
KL31 (G_G_BAT2) GD481 — 28
KL31 (G_G_BAT5) GD481 — 52
KL31 (G_R_VSS) GD481 — 54
KL31 (G_G_BAT3) GD481 — 75 — C1E115-A
E115 — MODULE - ENGINE CONTROL - ECM (VEHICLE SIDE)
GD414B BK/WH 2TAD 1.5 14398 705 mm
GD414C BK/WH 2TAD 1.5 14398 705 mm
GD414D BK/WH 2TAD 1.5 14398 705 mm
GD414E BK/WH 2TAD 1.5 14398 705 mm
GD414F BK/WH 2TAD 0.75 14398 705 mm
GD414G BK/WH 2TAD 1.5 14398 705 mm

S1D414
GD414A BK/WH 2TBD 6.0 14398 995 mm — G1D414 — 1p1 — D414
GD481A BK/GN 2TBD 4.0 14398 865 mm — G1D481 — 1p1 — D481

REFERENCE

PART MUST COMPLY WITH RESTRICTED SUBSTANCE MANAGEMENT STANDARD WSS-M99P9999 A1 TO SAFEGUARD HEALTH SAFETY AND THE ENVIRONMENT

DRAFTED IN ACCORDANCE WITH FORD MOTOR COMPANY ENGINEERING CAD AND DRAFTING STANDARDS VERSION 27.0

3RD ANGLE PROJ
DIMENSIONS ARE IN MILLIMETERS

CAD TYPE	CAD LOC.	CAD FILE	DTM
X-E3	-----	PHJC46-70C023-A1	IS MASTER
OPER NO.	UNIT	DRAWING	SIZE
-----	-----		A1
DESIGN	DETAIL	TITLE:	SHT 1
fkarade3	-----	H625 - 2019 LP3 Design GROUNDING - FRAME	OF 1
CHECKED	SAFETY		
-----	-----		
SCALE	DATE	DIVISION: EESE	
NTS	20120101	PLANT: -----	

Modified By: NYAYLA1
Date Changed: 12/3/2019

H625 2019 LP3 Design
C2.04 GROUNDING STRATEGY - FRAME

LTRS	REVISIONS		
ORIGINATOR	CHECKER	ENGR APP	MATL APP

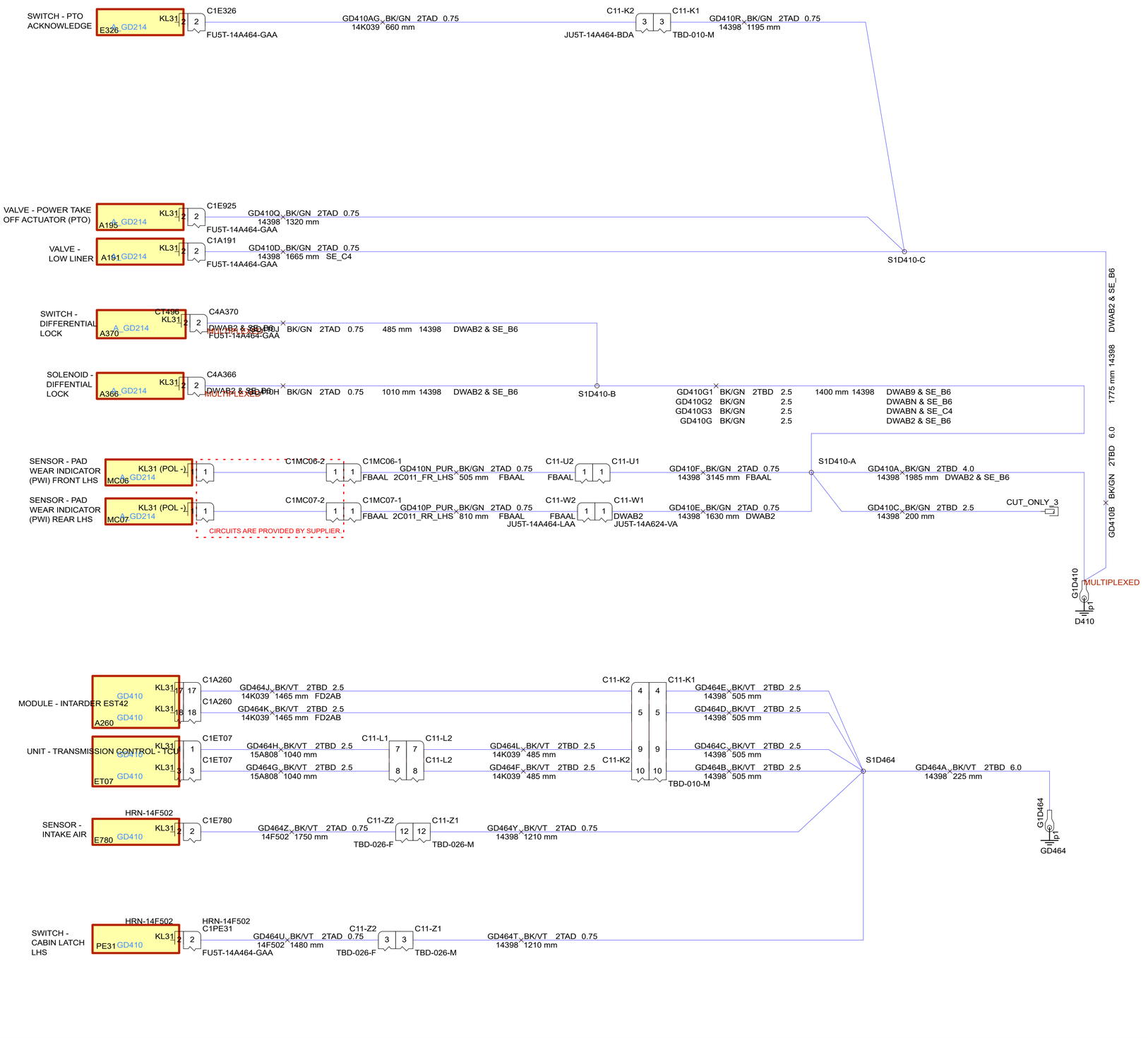

REFERENCE			
PART MUST COMPLY WITH RESTRICTED SUBSTANCE MANAGEMENT STANDARD WSS-M99P9999 A1 TO SAFEGUARD HEALTH SAFETY AND THE ENVIRONMENT			
DRAFTED IN ACCORDANCE WITH FORD MOTOR COMPANY ENGINEERING CAD AND DRAFTING STANDARDS VERSION 27.0			3RD ANGLE PROJ DIMENSIONS ARE IN MILLIMETERS
CAD TYPE X-E3	CAD LOC. TCE	CAD FILE PHJC46-70C023-A2	DTM IS MASTER
OPER NO. N/A	UNIT N/A	DRAWING	SIZE A1
DESIGN fkarade3	DETAIL -----	TITLE: H625 - 2019 LP3 Design GROUNDING - FRAME	SHT 1 OF 1
CHECKED -----	SAFETY MFG USE		
SCALE NTS	DATE 20160604	DIVISION: EESE	
		PLANT: N/A	

Modified By: WYATLA1
Mod Changed: 12/5/2019

H625 2019 LP3 Design
C2.04 GROUNDING STRATEGY - FRAME

LTRS	REVISIONS		
ORIGINATOR	CHECKER	ENGR APP	MATL APP

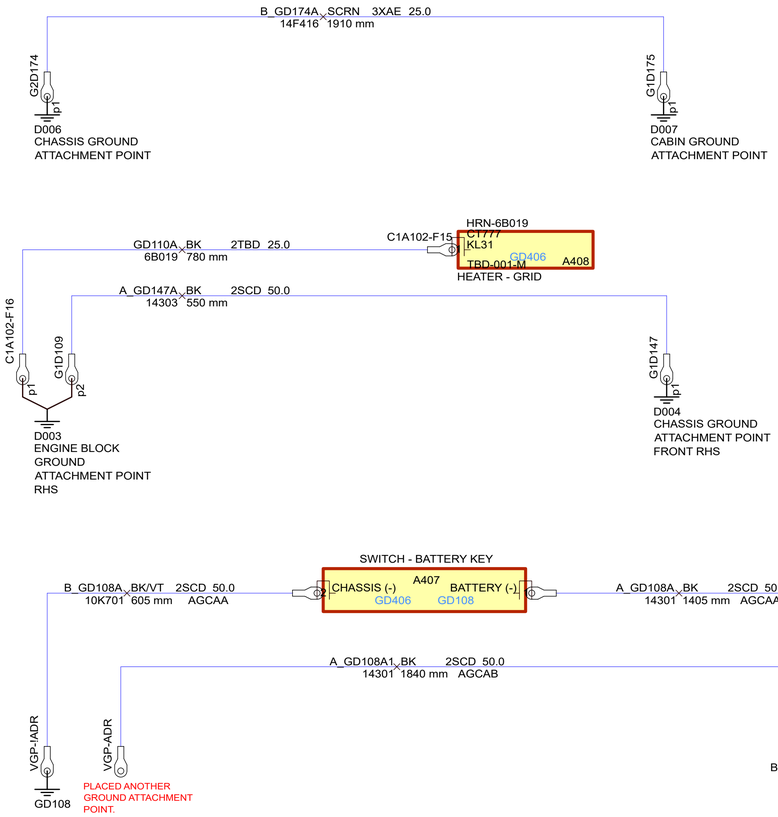

REFERENCE

PART MUST COMPLY WITH RESTRICTED SUBSTANCE MANAGEMENT STANDARD WSS-M99P9999 A1 TO SAFEGUARD HEALTH SAFETY AND THE ENVIRONMENT

DRAFTED IN ACCORDANCE WITH FORD MOTOR COMPANY ENGINEERING CAD AND DRAFTING STANDARDS VERSION 27.0

3RD ANGLE PROJ
DIMENSIONS ARE IN MILLIMETERS

CAD TYPE	CAD LOC.	CAD FILE	DTM
X-E3	TCE	PHJC46-70C023-A3	IS MASTER

OPER NO.	UNIT	DRAWING	SIZE
N/A	N/A		A1

DESIGN	DETAIL	TITLE:	SHT 1 OF 1
fkarade3	-----	H625 - 2019 LP3 Design GROUNDING - FRAME	
CHECKED	SAFETY		
-----	MFG USE		
SCALE	DATE	DIVISION: EESE	
NTS	20160621	PLANT: N/A	

Modified By: NYAYLA1
Date Changed: 12/5/2019

LTRS	REVISIONS		
ORIGINATOR	CHECKER	ENGR APP	MATL APP

H625 2019 LP3 Design
C3.01 - HS-CAN 1 & HS CAN 3 & MS CAN NETWORK

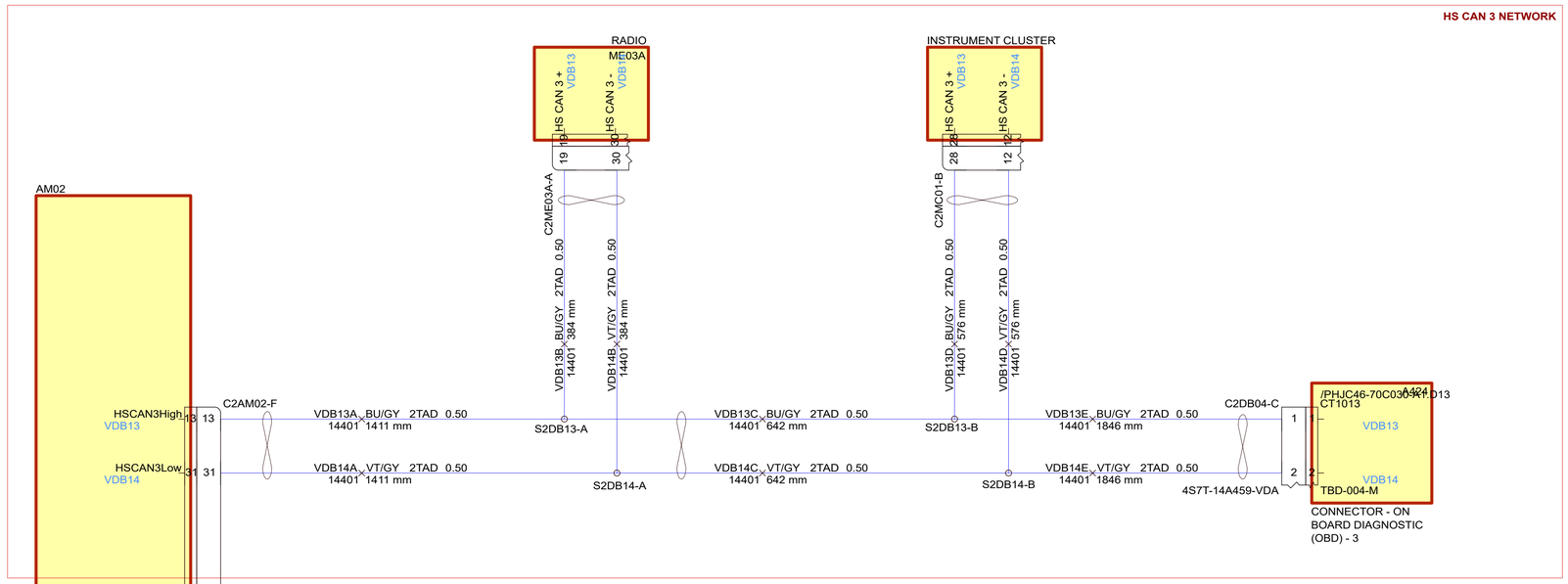

REFERENCE			
PART MUST COMPLY WITH RESTRICTED SUBSTANCE MANAGEMENT STANDARD WSS-M99P9999 A1 TO SAFEGUARD HEALTH SAFETY AND THE ENVIRONMENT			
DRAFTED IN ACCORDANCE WITH FORD MOTOR COMPANY ENGINEERING CAD AND DRAFTING STANDARDS VERSION 27.0		3RD ANGLE PROJ DIMENSIONS ARE IN MILLIMETERS	
CAD TYPE X-E3	CAD LOC. TCE	CAD FILE PHJC46-70C030-A1	DTM IS MASTER
OPER NO. N/A	UNIT N/A	DRAWING	SIZE A1
DESIGN sakay	DETAIL -----	TITLE: H625 - 2019 LP3 Design HS-CAN 1 & HS-CAN 3 & MS-CAN NETWORK	SHT 1 OF 1
CHECKED -----	SAFETY MFG USE		
SCALE NTS	DATE 20120101	DIVISION: EESE	
		PLANT: N/A	

Modified By: ABEKEL
Date Created: 1/15/2019

H625 2019 LP3 Design
C3.01 - VEHICLE CAN J1939 NETWORK

LTRS	REVISIONS		
ORIGINATOR	CHECKER	ENGR APP	MATL APP

VDB25R GN/OG 2TAD 0.50 14401 1042 mm
VDB26R GY/BU 2TAD 0.50 14401 1042 mm
C22-A2 14 15
9U5T-14489-AC
C22-A1 14 15
VDB25U GN/OG 2TAD 0.50 15A404 2690 mm
VDB26U GY/BU 2TAD 0.50 15A404 2690 mm
S9DB25-A
S9DB26-A
VDB25Y GN/OG 2TAD 0.50 15A404 379 mm
VDB26Y GY/BU 2TAD 0.50 15A404 379 mm
C99-A1 47
C99-A1 48

VDB25V GN/OG 2TAD 0.50 J1EAB 15A404 308 mm
VDB26V GY/BU 2TAD 0.50 J1EAB 15A404 308 mm
C9ES01 5 6
ES01
V CAN + VDB25
V CAN - VDB26
MODULE - PREDICTIVE CRUISE CONTROL (PCCM)

VDB25P GN/OG 2TAD 0.50 14401 673 mm
VDB26P GY/BU 2TAD 0.50 14401 673 mm
S2DB25-C
S2DB26-C
C2MP41-A D 4 C 3
JU5T-14489-SA
CAN H VDB25
CAN L VDB26
MP41
CAMERA FORWARD LOOKING

VDB26N GY/BU 2TAD 0.50 14401 2589 mm
VDB25N GN/OG 2TAD 0.50 14401 2589 mm

VDB25M GN/OG 2TAD 0.50 14401 708 mm
VDB26M GY/BU 2TAD 0.50 14401 708 mm
S2DB25-D
S2DB26-D
C2X209 3
C2X209 4
V CAN + VDB25
V CAN - VDB26
X209
SWITCH - MULTIFUNCTION STALK - MFS

VDB26L GY/BU 2TAD 0.50 14401 106 mm
VDB25L GN/OG 2TAD 0.50 14401 106 mm

VCANLow VDB26 11
VCANHigh VDB25 29
AM02
C2AM02-F 11 11
C2AM02-F 29 29
VDB26A GY/BU 2TAD 0.50 14401 738 mm
VDB25A GN/OG 2TAD 0.50 14401 738 mm
MODULE - BODY CONTROL (BCM)

V CAN + VDB25 16
V CAN - VDB26 18
MC39
C2MC39-A 16 18
VDB25BH GN/OG 2TAD 0.50 14401 293 mm
VDB26BH GY/BU 2TAD 0.50 14401 293 mm
S2DB25-H
S2DB26-H
MODULE - TIRE PRESSURE MONITORING SYSTEM (TPMS)

VDB25K GN/OG 2TAD 0.50 14401 667 mm
VDB26K GY/BU 2TAD 0.50 14401 667 mm
S2DB25-B
S2DB26-B
C2MC01-B 27 11
V CAN + VDB25
V CAN - VDB26
MC01
INSTRUMENT CLUSTER

VDB25BK GN/OG 2TAD 0.50 14401 1178 mm
VDB26BK GY/BU 2TAD 0.50 14401 1178 mm
0.50 2TAD GY/BU 329 mm 14401 VDB26AT
0.50 2TAD GN/OG 329 mm 14401 VDB25AT
S2DB25-G
S2DB26-G
VDB25AU GN/OG 2TAD 0.50 14401 303 mm
VDB26AU GY/BU 2TAD 0.50 14401 303 mm
C2DB04-A 6 14
V CAN + VDB25
V CAN - VDB26
DB04-A
CONNECTOR - ON BOARD DIAGNOSTIC (OBD) - 1

REFERENCE

PART MUST COMPLY WITH RESTRICTED SUBSTANCE MANAGEMENT STANDARD WSS-M99P9999 A1 TO SAFEGUARD HEALTH SAFETY AND THE ENVIRONMENT

DRAFTED IN ACCORDANCE WITH FORD MOTOR COMPANY ENGINEERING CAD AND DRAFTING STANDARDS VERSION 27.0

3RD ANGLE PROJ
DIMENSIONS ARE IN MILLIMETERS

CAD TYPE	CAD LOC.	CAD FILE	DTM
X-E3	TCE	PHJC46-70C030-A3	IS MASTER

OPER NO.	UNIT	DRAWING	SIZE
N/A	N/A		A1

DESIGN	DETAIL	TITLE:	SHT 1 OF 1
sakay	-----	H625 - 2019 LP3 Design VEHICLE CAN J1939 NETWORK	

CHECKED	SAFETY
-----	MFG USE

SCALE	DATE	DIVISION: EESE
NTS	20120101	PLANT: N/A

Modified By: NYAYLA1
Last Changed: 1/23/2019

H625 2019 LP3 Design
C3.01 - VEHICLE CAN J1939 NETWORK

LTRS	REVISIONS		
ORIGINATOR	CHECKER	ENGR APP	MATL APP

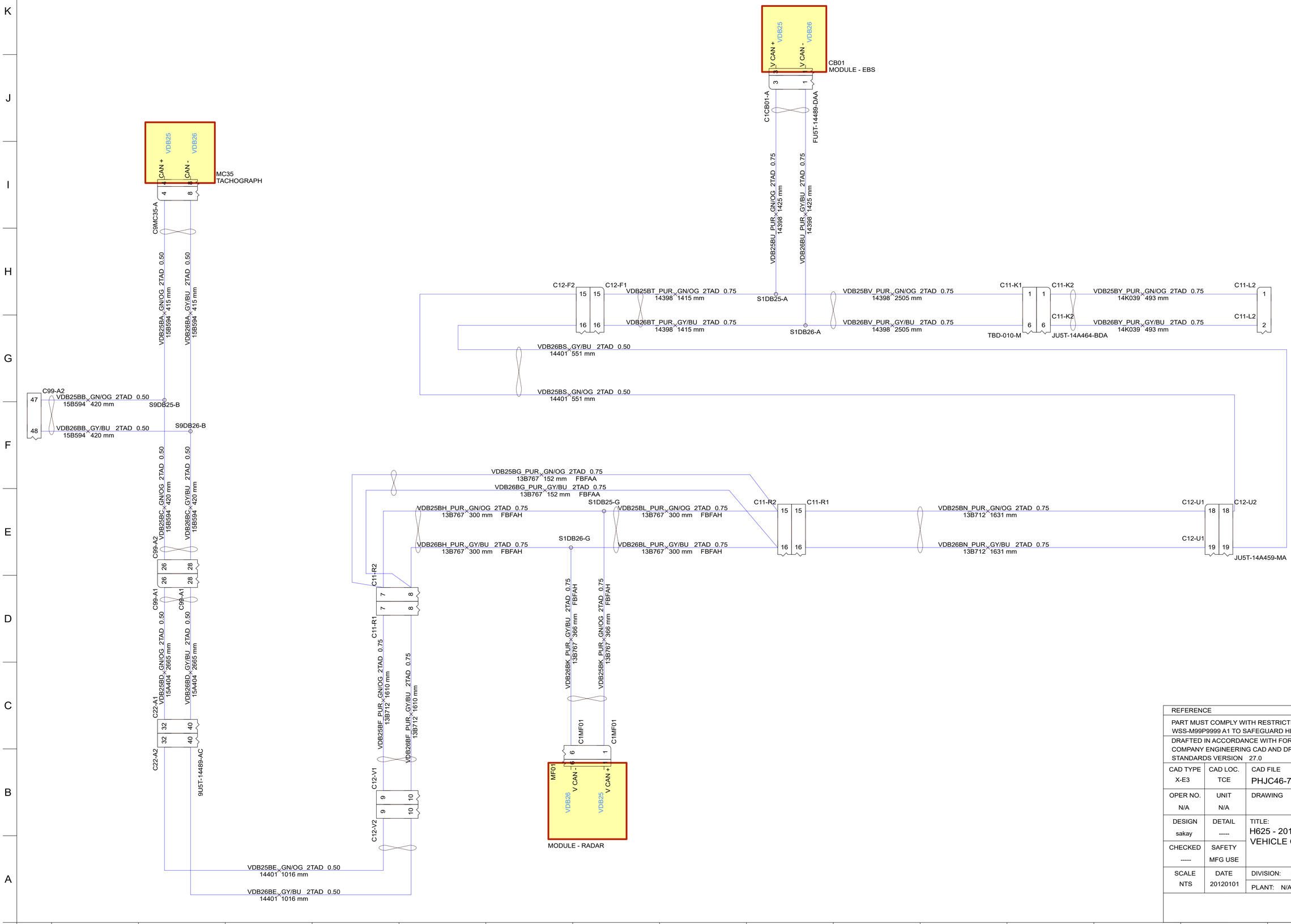

REFERENCE

PART MUST COMPLY WITH RESTRICTED SUBSTANCE MANAGEMENT STANDARD WSS-M99P9999 A1 TO SAFEGUARD HEALTH SAFETY AND THE ENVIRONMENT

DRAFTED IN ACCORDANCE WITH FORD MOTOR COMPANY ENGINEERING CAD AND DRAFTING STANDARDS VERSION 27.0

3RD ANGLE PROJ
DIMENSIONS ARE IN MILLIMETERS

CAD TYPE	CAD LOC.	CAD FILE	DTM
X-E3	TCE	PHJC46-70C030-A4	IS MASTER
OPER NO.	UNIT	DRAWING	SIZE
N/A	N/A		A1
DESIGN	DETAIL	TITLE: H625 - 2019 LP3 Design VEHICLE CAN J1939 NETWORK	SHT 1 OF 1
sakay	-----		
CHECKED	SAFETY		
-----	MFG USE		
SCALE	DATE	DIVISION: EESE	
NTS	20120101	PLANT: N/A	

Modified By: NYAYLA1
Date Changed: 12/3/2019

H625 2019 LP3 Design
C3.01 - VEHICLE CAN J1939 NETWORK

LTRS	REVISIONS		
ORIGINATOR	CHECKER	ENGR APP	MATL APP

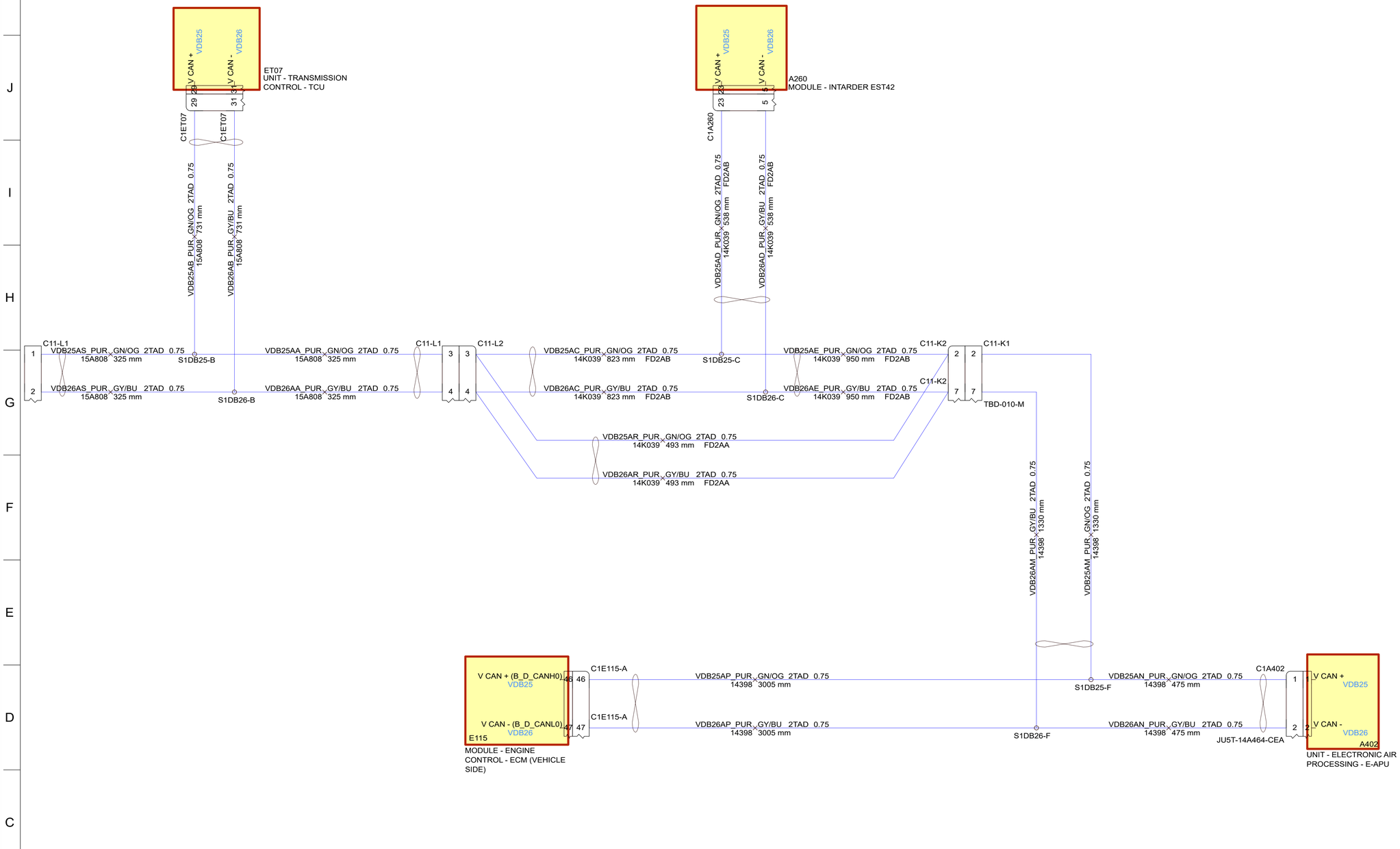

REFERENCE			
PART MUST COMPLY WITH RESTRICTED SUBSTANCE MANAGEMENT STANDARD WSS-M99P9999 A1 TO SAFEGUARD HEALTH SAFETY AND THE ENVIRONMENT			
DRAFTED IN ACCORDANCE WITH FORD MOTOR COMPANY ENGINEERING CAD AND DRAFTING STANDARDS VERSION 27.0		3RD ANGLE PROJ DIMENSIONS ARE IN MILLIMETERS	
CAD TYPE X-E3	CAD LOC. TCE	CAD FILE PHJC46-70C030-A5	DTM IS MASTER
OPER NO. N/A	UNIT N/A	DRAWING	SIZE A1
DESIGN sakay	DETAIL -----	TITLE: H625 - 2019 LP3 Design VEHICLE CAN J1939 NETWORK	SHT 1 OF 1
CHECKED -----	SAFETY MFG USE		
SCALE NTS	DATE 20120101	DIVISION: EESE	
		PLANT: N/A	

Modified By: IVYAYLAN
Date Changed: 12/5/2019

H625 2019 LP3 Design
C3.01 - LOCAL INTERCONNECT NETWORK (LIN)

LTRS	REVISIONS		
ORIGINATOR	CHECKER	ENGR APP	MATL APP

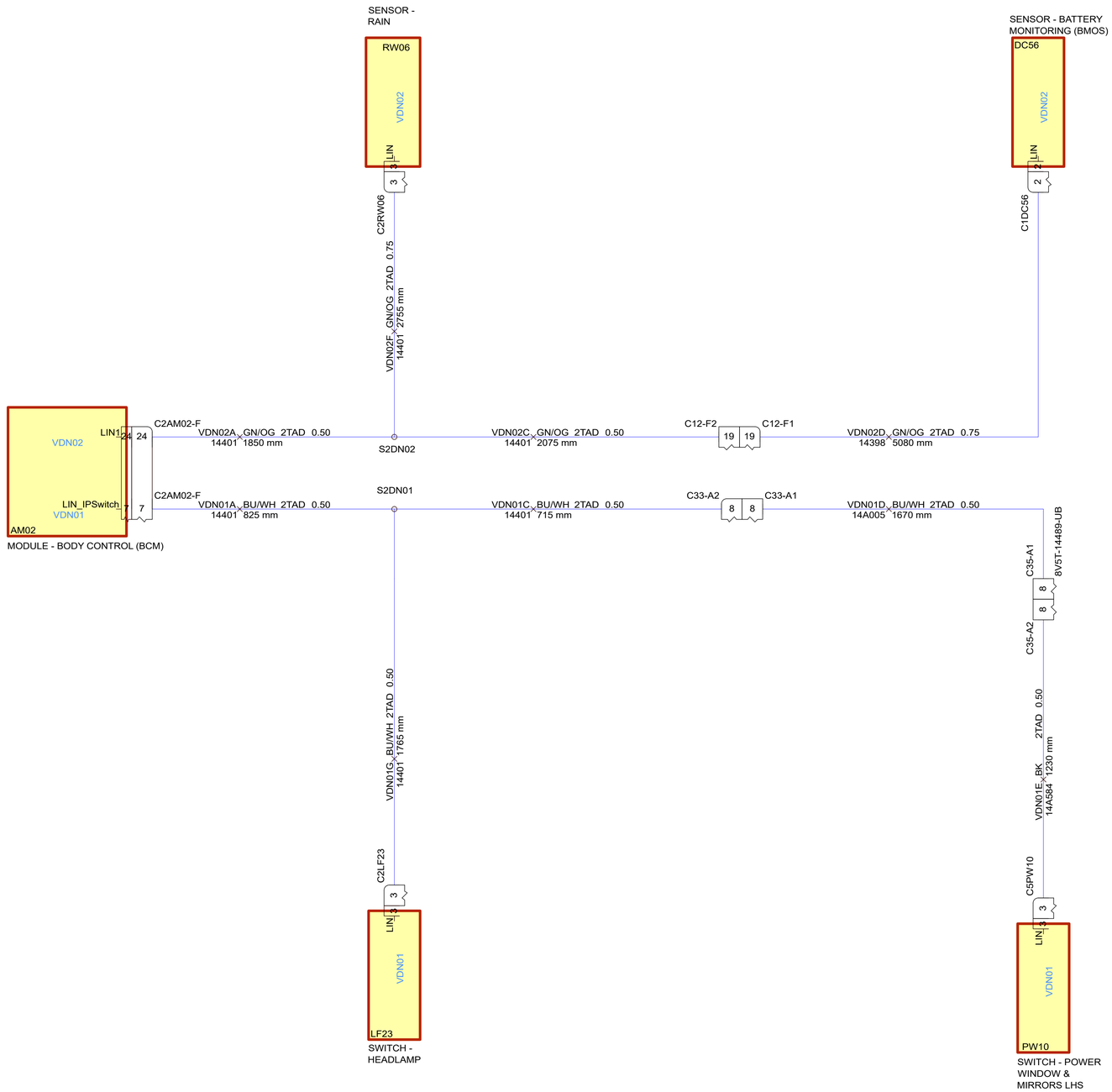

REFERENCE			
PART MUST COMPLY WITH RESTRICTED SUBSTANCE MANAGEMENT STANDARD WSS-M99P9999 A1 TO SAFEGUARD HEALTH SAFETY AND THE ENVIRONMENT			
DRAFTED IN ACCORDANCE WITH FORD MOTOR COMPANY ENGINEERING CAD AND DRAFTING STANDARDS VERSION 27.0		3RD ANGLE PROJ DIMENSIONS ARE IN MILLIMETERS	
CAD TYPE X-E3	CAD LOC. TCE	CAD FILE PHJC46-70C030-A6	DTM IS MASTER
OPER NO. N/A	UNIT N/A	DRAWING	SIZE A1
DESIGN sakay	DETAIL -----	TITLE: H625 - 2019 LP3 Design LOCAL INTERCONNECT NETWORK (LIN)	SHT 1 OF 1
CHECKED -----	SAFETY MFG USE		
SCALE NTS	DATE 20160510	DIVISION: EESE	
		PLANT: N/A	

Modified By: ABEKEL
Date Changed: 11/26/2019

LTRS	REVISIONS		
ORIGINATOR	CHECKER	ENGR APP	MATL APP

H625 2019 LP3 Design
C3.01 - FLASH & PRIVATE CAN NETWORK

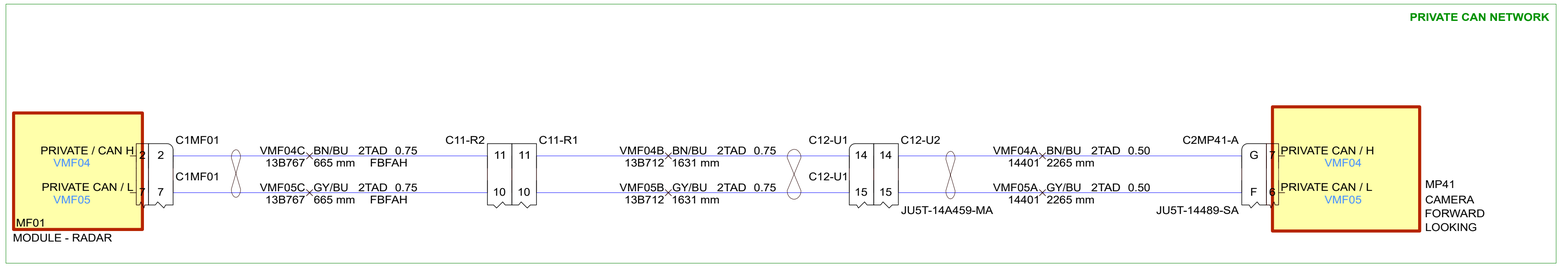

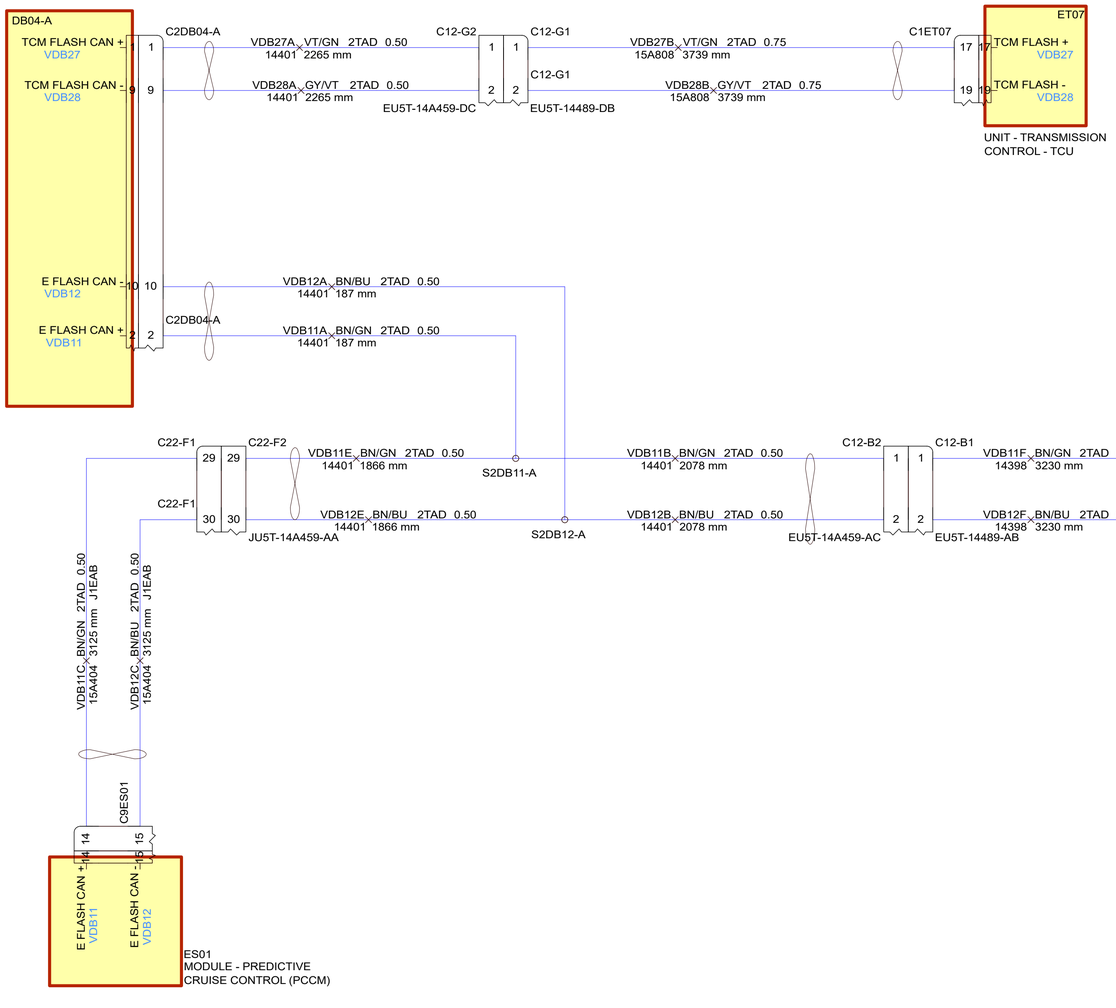

REFERENCE			
PART MUST COMPLY WITH RESTRICTED SUBSTANCE MANAGEMENT STANDARD WSS-M99P9999 A1 TO SAFEGUARD HEALTH SAFETY AND THE ENVIRONMENT			
DRAFTED IN ACCORDANCE WITH FORD MOTOR COMPANY ENGINEERING CAD AND DRAFTING STANDARDS VERSION 27.0			3RD ANGLE PROJ DIMENSIONS ARE IN MILLIMETERS
CAD TYPE X-E3	CAD LOC. TCE	CAD FILE PHJC46-70C030-A7	DTM IS MASTER
OPER NO. N/A	UNIT N/A	DRAWING	SIZE A1
DESIGN sakay	DETAIL -----	TITLE: H625 - 2019 LP3 Design FLASH & PRIVATE CAN NETWORK	SHT 1 OF 1
CHECKED -----	SAFETY MFG USE		
SCALE NTS	DATE 20120101	DIVISION: EESE	
		PLANT: N/A	

Modified By: NYKYLA1
Date Changed: 4/30/2019

H625 2019 LP3 Design
C3.02 I-CAN (FLEET MANAGEMENT & AFTERMARKET CAN)

LTRS	REVISIONS		
ORIGINATOR	CHECKER	ENGR APP	MATL APP

UNIT - REMOTE CONTROL ECAS (RCU)
A182 | VMR33 I CAN + | VMR34 I CAN -
7L1T-14A459-BA
VMR33U WH/BN 2TAD 0.75 14A005 376 mm DWABN | DWAB9
VMR33L YE/GY 2TAD 0.75 14A005 376 mm DWABN | DWAB9 C2A182-1
S4MR33H
S4MR34H
C33-A2 58 58 C33-A1
C33-A2 59 59 C33-A1
VMR33T YE/GY 2TAD 0.75 14A005 3114 mm DWABN | DWAB9
VMR34T WH/BN 2TAD 0.75 14A005 3114 mm DWABN | DWAB9
VMR33V YE/GY 2TAD 0.75 14A005 3114 mm DWABN | DWAB9
VMR34V WH/BN 2TAD 0.75 14A005 3114 mm DWABN | DWAB9
C33-A1 56 56 C33-A2
C33-A1 57 57 C33-A2
VMR33A YE/GY 2TAD 0.50 14401 1487 mm
VMR34A WH/BN 2TAD 0.50 14401 1487 mm
C2AM02-F 14 14
C2AM02-F 32 32
AM02
ECANHigh VMR33
ECANLow VMR34
MODULE - BODY CONTROL (BCM)
VMR33Y YE/GY 2TAD 0.75 14A005 81 mm DWAB2
VMR34Y WH/BN 2TAD 0.75 14A005 81 mm DWAB2
VMR33H YE/GY 2TAD 0.50 15B594 865 mm
VMR34H WH/BN 2TAD 0.50 15B594 865 mm
C9MC35-C2 5 CAN (+) VMR33
C9MC35-C2 7 CAN (-) VMR34
TACHOGRAPH
C99-A2 56 56 57 57
C99-A1 56 56 57 57
VMR33Q YE/GY 2TAD 0.50 15A404 860 mm
VMR34Q WH/BN 2TAD 0.50 15A404 860 mm
CT373 I_CAN - VMR34 7 C2AM05 HKSAC
CT373 I_CAN + VMR33 6 C2AM05 HKSAC
TBD-040-M JU5T-14489-BCA
MODULE - ERA GLONASS
VMR33P YE/GY 2TAD 0.50 14401 1416 mm HKSAC
VMR34P WH/BN 2TAD 0.50 14401 1416 mm HKSAC
S2MR33E
S2MR34E
VMR33R YE/GY 2TAD 0.50 14401 1057 mm
VMR34R WH/BN 2TAD 0.50 14401 1057 mm
S9MR33G
S9MR34G
VMR33W YE/GY 2TAD 0.50 15A404 243 mm
VMR34W WH/BN 2TAD 0.50 15A404 243 mm
C9DC15 1 1 RESISTOR
C9DC15 2 2 TBD-002-F
VMR33 R116 120ohm VMR34
VMR33G YE/GY 2TAD 0.50 15A404 440 mm
VMR34G WH/BN 2TAD 0.50 15A404 440 mm
S9MR33B
S9MR34B
VMR33L YE/GY 2TAD 0.50 15A404 1092 mm
VMR34L WH/BN 2TAD 0.50 15A404 1092 mm
C2AH01B 6 CT979 AH01B I CAN (+) VMR33
C2AH01B 9 I CAN (-) VMR34
TBD-012-M JU5T-14489-CEA
MODULE - FLEET MANAGEMENT (B)
C2E615 1 1 2 2 TBD-002-M
RESISTOR 2 VMR33 R117 VMR34
VMR33E YE/GY 2TAD 0.50 14401 1195 mm HKSAC
VMR34E WH/BN 2TAD 0.50 14401 1195 mm HKSAC
VMR33N YE/GY 2TAD 0.50 14401 501 mm HKSAC
VMR34N WH/BN 2TAD 0.50 14401 501 mm HKSAC
C2DB04-B 6 14
CT985 I CAN (+) VMR33 I CAN (-) VMR34 TBD-016-M
DB04-B
CONNECTOR - ON BOARD DIAGNOSTIC (OBD) - 2
S2MR33
S2MR34
VMR33B YE/GY 2TAD 0.50 14401 445 mm
VMR34B WH/BN 2TAD 0.50 14401 445 mm
C22-F2 21 21 C22-F1
C22-F2 20 20 C22-F1
JU5T-14A459-AA
VMR33D YE/GY 2TAD 0.50 15A404 1492 mm
VMR34D WH/BN 2TAD 0.50 15A404 1492 mm
VMR33C YE/GY 2TAD 0.50 14401 753 mm
VMR34C WH/BN 2TAD 0.50 14401 753 mm
C2AH02 17 17 C2AH02 18 18
AH02 I CAN (+) VMR33 I CAN (-) VMR34
CONNECTOR - AFTERMARKET CABIN

REFERENCE			
PART MUST COMPLY WITH RESTRICTED SUBSTANCE MANAGEMENT STANDARD WSS-M99P9999 A1 TO SAFEGUARD HEALTH SAFETY AND THE ENVIRONMENT			
DRAFTED IN ACCORDANCE WITH FORD MOTOR COMPANY ENGINEERING CAD AND DRAFTING STANDARDS VERSION 27.0		3RD ANGLE PROJ DIMENSIONS ARE IN MILLIMETERS	
CAD TYPE X-E3	CAD LOC.	CAD FILE PHJC46-70C030-A8	DTM IS MASTER
OPER NO. N/A	UNIT N/A	DRAWING	SIZE A1
DESIGN fkarade3	DETAIL -----	TITLE: H625 - 2019 LP3 Design I-CAN (FLEET MANAGEMENT & AFTERMARKET CA	SHT 1 OF 1
CHECKED -----	SAFETY MFG USE		
SCALE N/A	DATE 20161129	DIVISION: EESE	
		PLANT: N/A	

Modified By: NYAYLA1
Date Changed: 12/2019

H625 2019 LP3 Design
C4.01 CONVENTIONAL STARTING & CHARGING

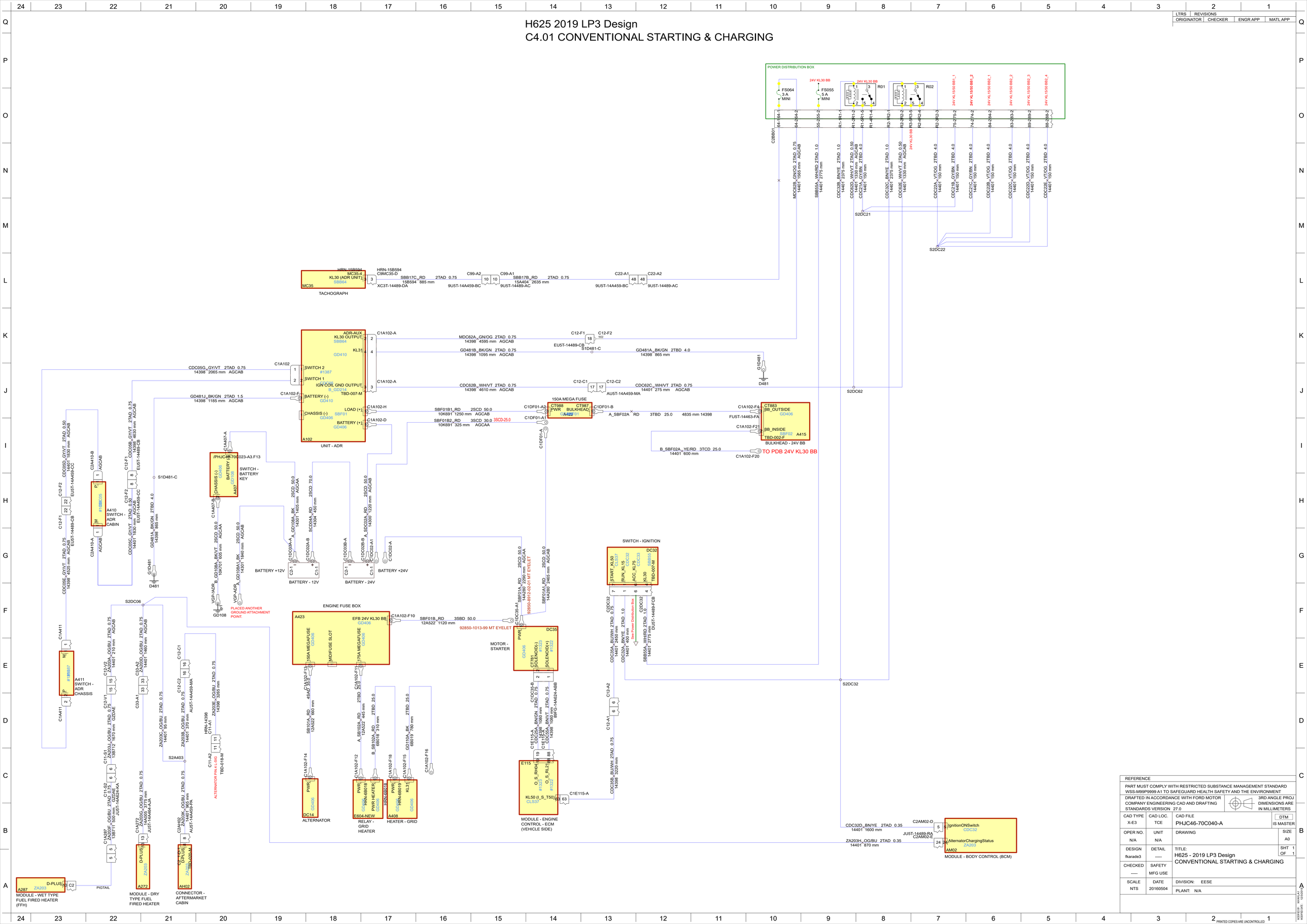

LTRS	REVISIONS		
ORIGINATOR	CHECKER	ENGR APP	MATL APP

REFERENCE

PART MUST COMPLY WITH RESTRICTED SUBSTANCE MANAGEMENT STANDARD WSS-M99P9999 A1 TO SAFEGUARD HEALTH SAFETY AND THE ENVIRONMENT

DRAFTED IN ACCORDANCE WITH FORD MOTOR COMPANY ENGINEERING CAD AND DRAFTING STANDARDS VERSION 27.0

3RD ANGLE PROJ DIMENSIONS ARE IN MILLIMETERS

CAD TYPE	CAD LOC.	CAD FILE	DTM
X-E3	TCE	PHJC46-70C040-A	IS MASTER
OPER NO.	UNIT	DRAWING	SIZE
N/A	N/A		A0
DESIGN	DETAIL	TITLE:	SHT 1 OF 1
fkarade3	-----	H625 - 2019 LP3 Design CONVENTIONAL STARTING & CHARGING	
CHECKED	SAFETY		
-----	MFG USE		
SCALE	DATE	DIVISION: EESE	
NTS	20160504	PLANT: N/A	

PRINTED COPIES ARE UNCONTROLLED

H625 2019 LP3 Design
C6.02 REAR AXLE DIFFERENTIAL LOCK-OUT

LTRS	REVISIONS		
ORIGINATOR	CHECKER	ENGR APP	MATL APP

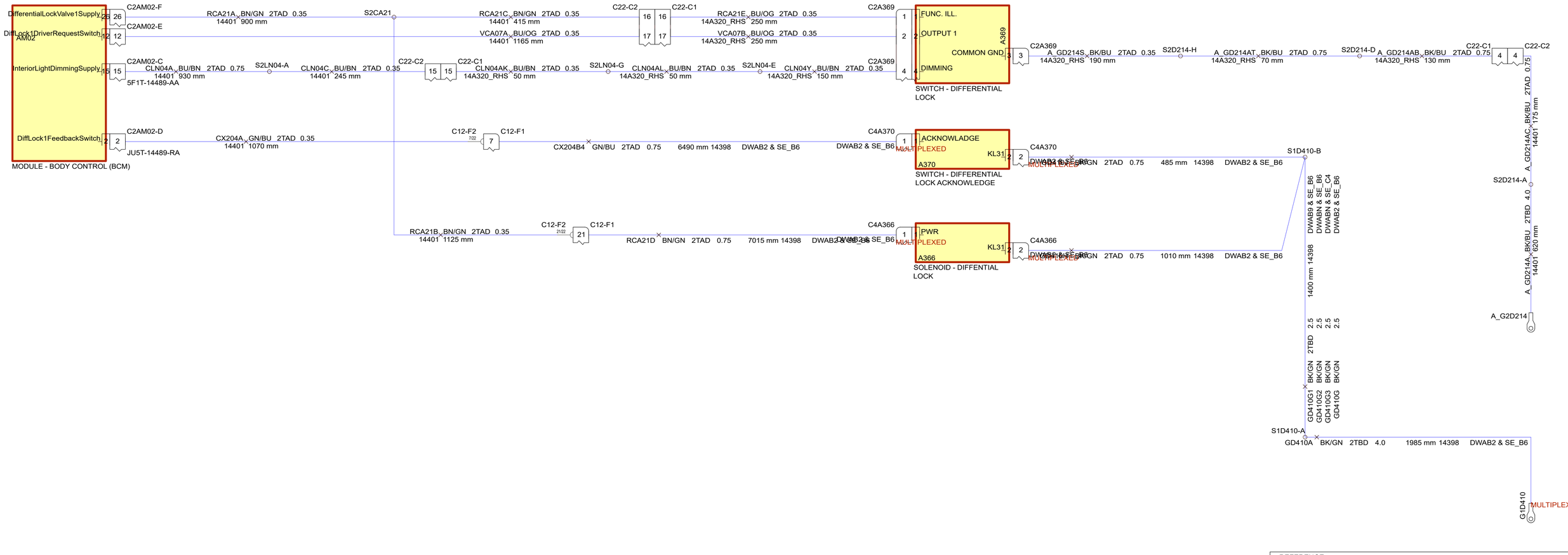

REFERENCE			
PART MUST COMPLY WITH RESTRICTED SUBSTANCE MANAGEMENT STANDARD WSS-M99P9999 A1 TO SAFEGUARD HEALTH SAFETY AND THE ENVIRONMENT			
DRAFTED IN ACCORDANCE WITH FORD MOTOR COMPANY ENGINEERING CAD AND DRAFTING STANDARDS VERSION 27.0		3RD ANGLE PROJ DIMENSIONS ARE IN MILLIMETERS	
CAD TYPE X-E3	CAD LOC. TCE	CAD FILE PHJC46-70C061-A	DTM IS MASTER
OPER NO. N/A	UNIT N/A	DRAWING	SIZE A1
DESIGN agezer1	DETAIL -----	TITLE: H625 - 2019 LP3 Design REAR AXLE DIFFERENTIAL LOCK-OUT	SHT 1 OF 1
CHECKED -----	SAFETY MFG USE		
SCALE NTS	DATE 20120101	DIVISION: EESE PLANT: N/A	

Modified By: IVYKLAI
Date Changed: 12/2/2019

H625 2019 LP3 Design
C7.02 EBS / ESP

LTRS	REVISIONS		
ORIGINATOR	CHECKER	ENGR APP	MATL APP

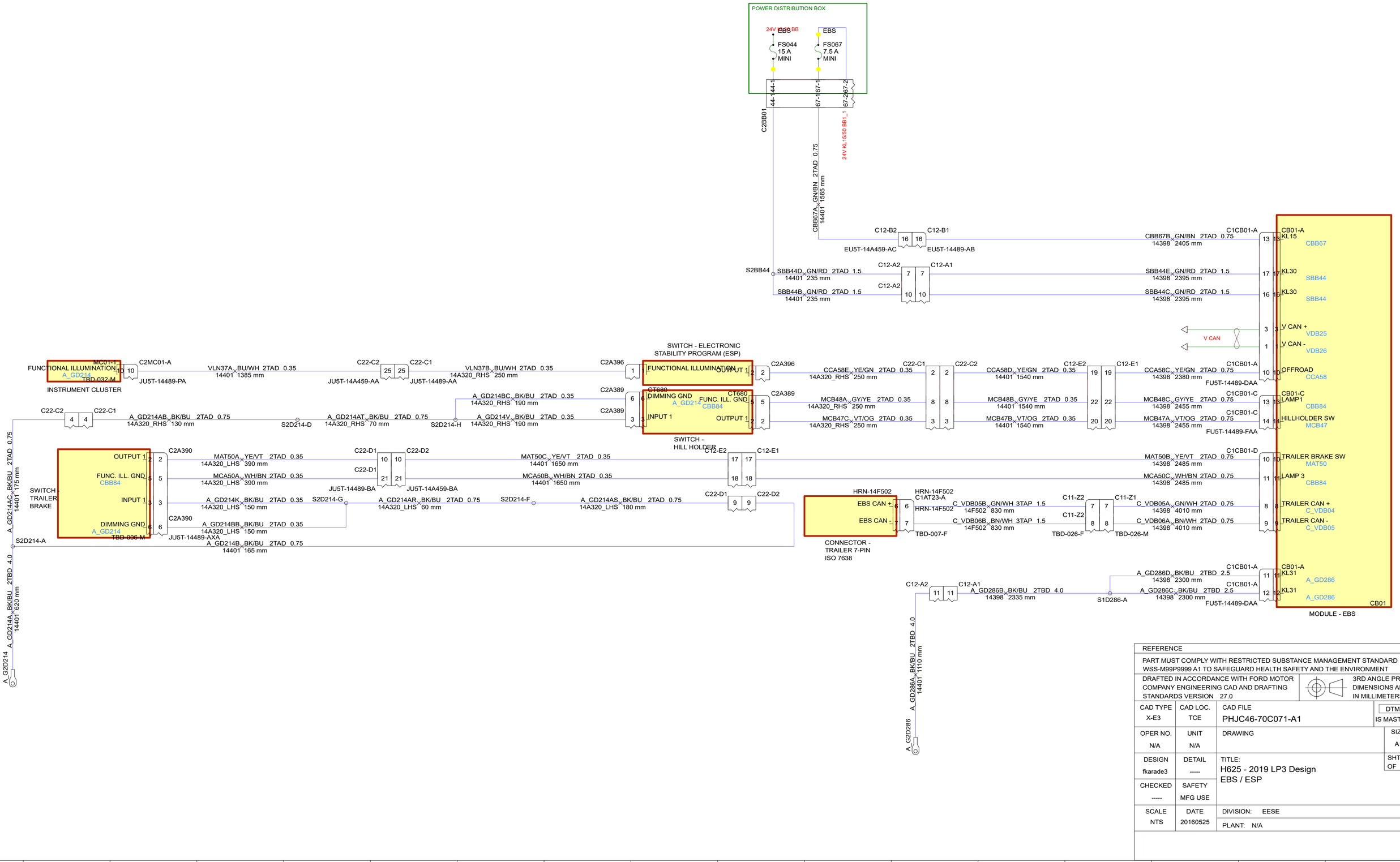

REFERENCE			
PART MUST COMPLY WITH RESTRICTED SUBSTANCE MANAGEMENT STANDARD WSS-M99P9999 A1 TO SAFEGUARD HEALTH SAFETY AND THE ENVIRONMENT			
DRAFTED IN ACCORDANCE WITH FORD MOTOR COMPANY ENGINEERING CAD AND DRAFTING STANDARDS VERSION 27.0		3RD ANGLE PROJ DIMENSIONS ARE IN MILLIMETERS	
CAD TYPE X-E3	CAD LOC. TCE	CAD FILE PHJC46-70C071-A1	DTM IS MASTER
OPER NO. N/A	UNIT N/A	DRAWING	SIZE A1
DESIGN fkarade3	DETAIL -----	TITLE: H625 - 2019 LP3 Design EBS / ESP	SHT 1 OF 1
CHECKED -----	SAFETY MFG USE		
SCALE NTS	DATE 20160525	DIVISION: EESE	
		PLANT: N/A	

Modified By: ABEKEL
Date Changed: 1/26/2016

H625 2019 LP3 Design
C7.02 EBS / ESP

LTRS	REVISIONS		
ORIGINATOR	CHECKER	ENGR APP	MATL APP

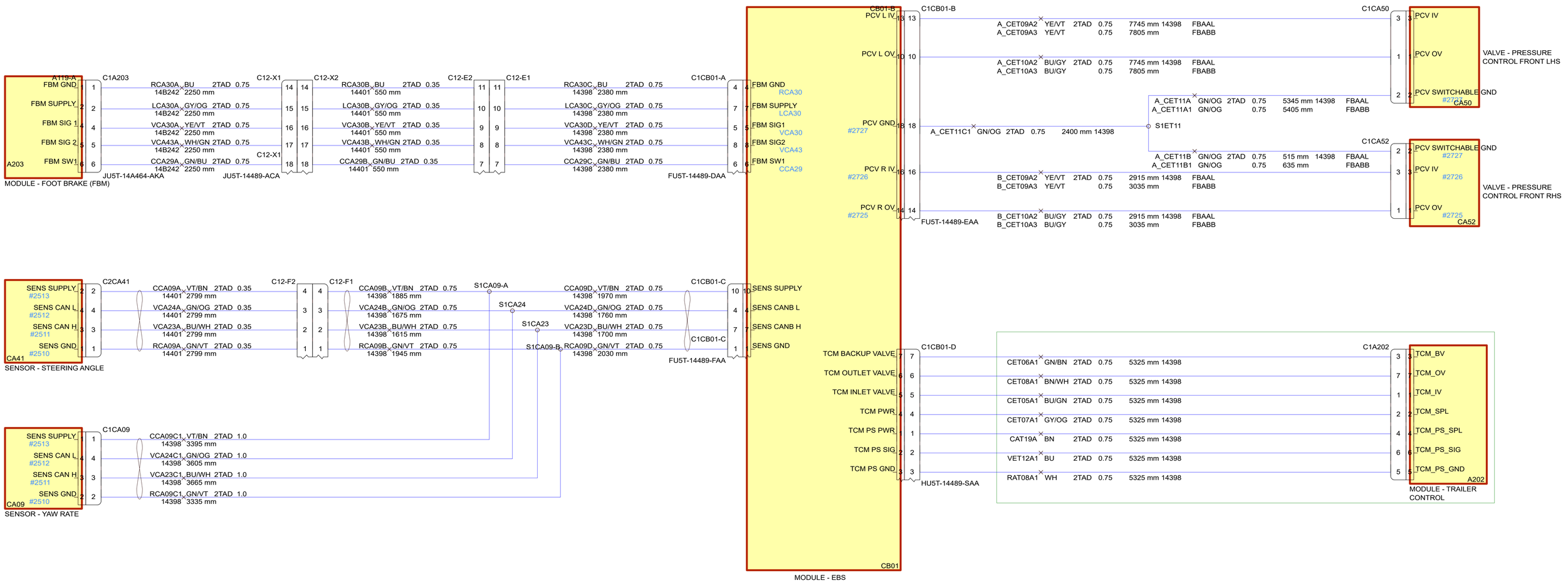

REFERENCE			
PART MUST COMPLY WITH RESTRICTED SUBSTANCE MANAGEMENT STANDARD WSS-M99P9999 A1 TO SAFEGUARD HEALTH SAFETY AND THE ENVIRONMENT			
DRAFTED IN ACCORDANCE WITH FORD MOTOR COMPANY ENGINEERING CAD AND DRAFTING STANDARDS VERSION 27.0		3RD ANGLE PROJ DIMENSIONS ARE IN MILLIMETERS	
CAD TYPE X-E3	CAD LOC. TCE	CAD FILE PHJC46-70C071-A2	DTM IS MASTER
OPER NO. N/A	UNIT N/A	DRAWING	SIZE A1
DESIGN fkarade3	DETAIL -----	TITLE: H625 - 2019 LP3 Design EBS / ESP	SHT 1 OF 1
CHECKED -----	SAFETY MFG USE		
SCALE NTS	DATE 20160502	DIVISION: EESE	
		PLANT: N/A	

Modified By: IVYAYLA1
Date Changed: 12/5/2015

H625 2019 LP3 Design
C7.02 EBS / ESP

LTRS	REVISIONS		
ORIGINATOR	CHECKER	ENGR APP	MATL APP

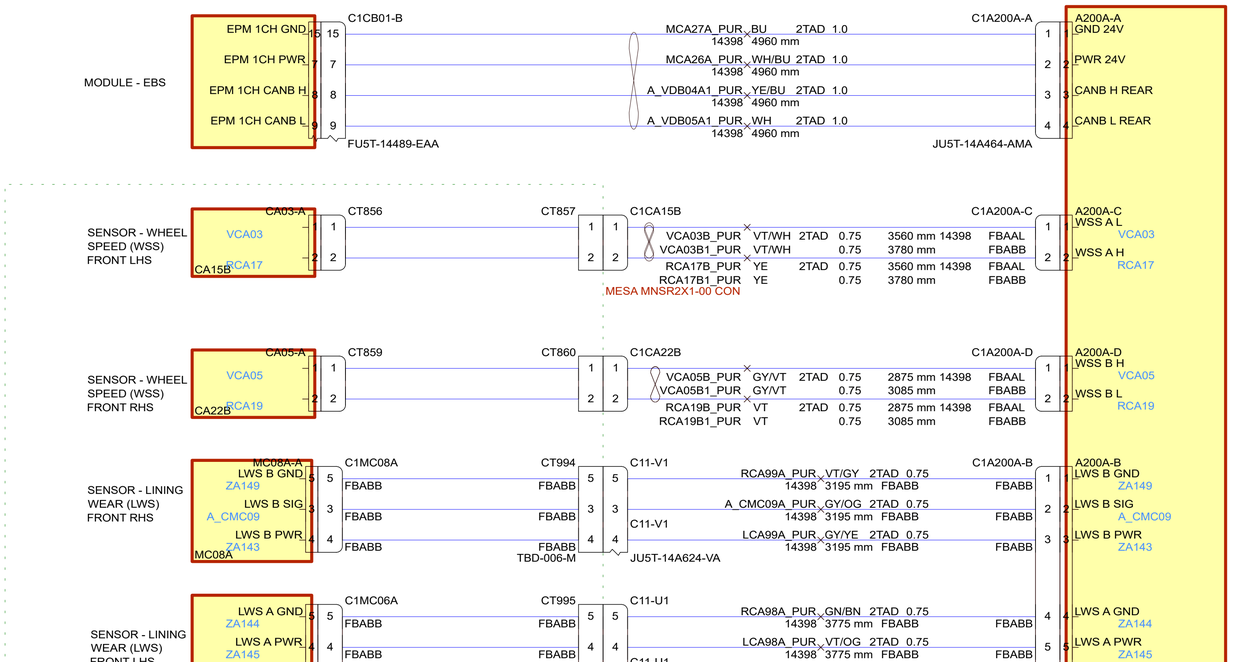

REFERENCE			
PART MUST COMPLY WITH RESTRICTED SUBSTANCE MANAGEMENT STANDARD WSS-M99P9999 A1 TO SAFEGUARD HEALTH SAFETY AND THE ENVIRONMENT			
DRAFTED IN ACCORDANCE WITH FORD MOTOR COMPANY ENGINEERING CAD AND DRAFTING STANDARDS VERSION 27.0			3RD ANGLE PROJ DIMENSIONS ARE IN MILLIMETERS
CAD TYPE X-E3	CAD LOC. TCE	CAD FILE PHJC46-70C071-A3	DTM IS MASTER
OPER NO. N/A	UNIT N/A	DRAWING	SIZE A1
DESIGN fkarade3	DETAIL -----	TITLE: H625 - 2019 LP3 Design EBS / ESP	SHT 1 OF 1
CHECKED -----	SAFETY MFG USE		
SCALE NTS	DATE 20160502	DIVISION: EESE	
		PLANT: N/A	

Modified By: NYAYLA1
Date Changed: 12/3/2019

H625 2019 LP3 Design
C7.02 EBS / ESP

LTRS	REVISIONS		
ORIGINATOR	CHECKER	ENGR APP	MATL APP

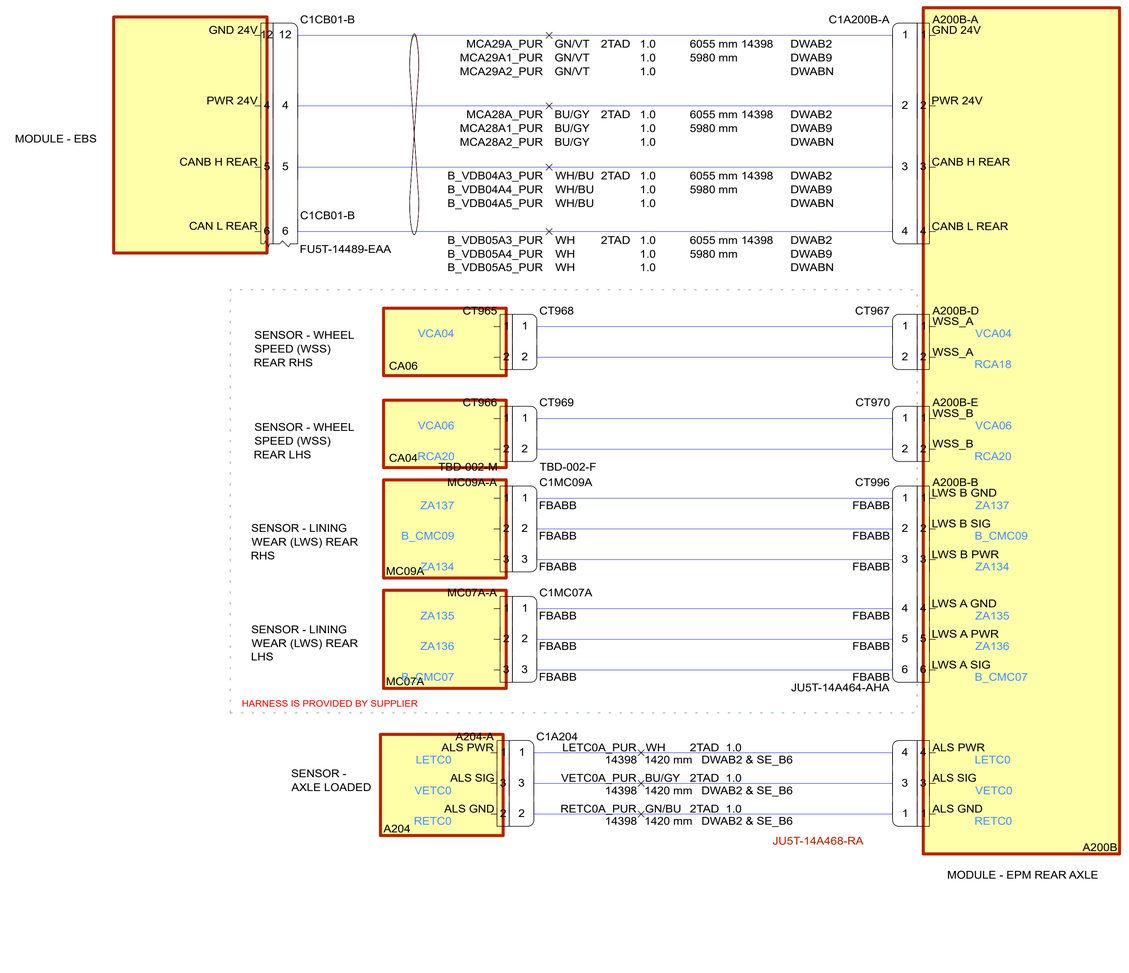

REFERENCE			
PART MUST COMPLY WITH RESTRICTED SUBSTANCE MANAGEMENT STANDARD WSS-M99P9999 A1 TO SAFEGUARD HEALTH SAFETY AND THE ENVIRONMENT			
DRAFTED IN ACCORDANCE WITH FORD MOTOR COMPANY ENGINEERING CAD AND DRAFTING STANDARDS VERSION 27.0		3RD ANGLE PROJ DIMENSIONS ARE IN MILLIMETERS	
CAD TYPE X-E3	CAD LOC. TCE	CAD FILE PHJC46-70C071-A4	DTM IS MASTER
OPER NO. N/A	UNIT N/A	DRAWING	SIZE A1
DESIGN fkarade3	DETAIL -----	TITLE: H625 - 2019 LP3 Design EBS / ESP	SHT 1 OF 1
CHECKED -----	SAFETY MFG USE		
SCALE NTS	DATE 20160502	DIVISION: EESE	
		PLANT: N/A	

Modified By: NYAYLA1
Date Changed: 12/5/2019

LTRS	REVISIONS			
ORIGINATOR	CHECKER	ENGR APP	MATL APP	

H625 2019 LP3 Design
C7.07 - ELECTRONICALLY CONTROLLED AIR SUSPENSION

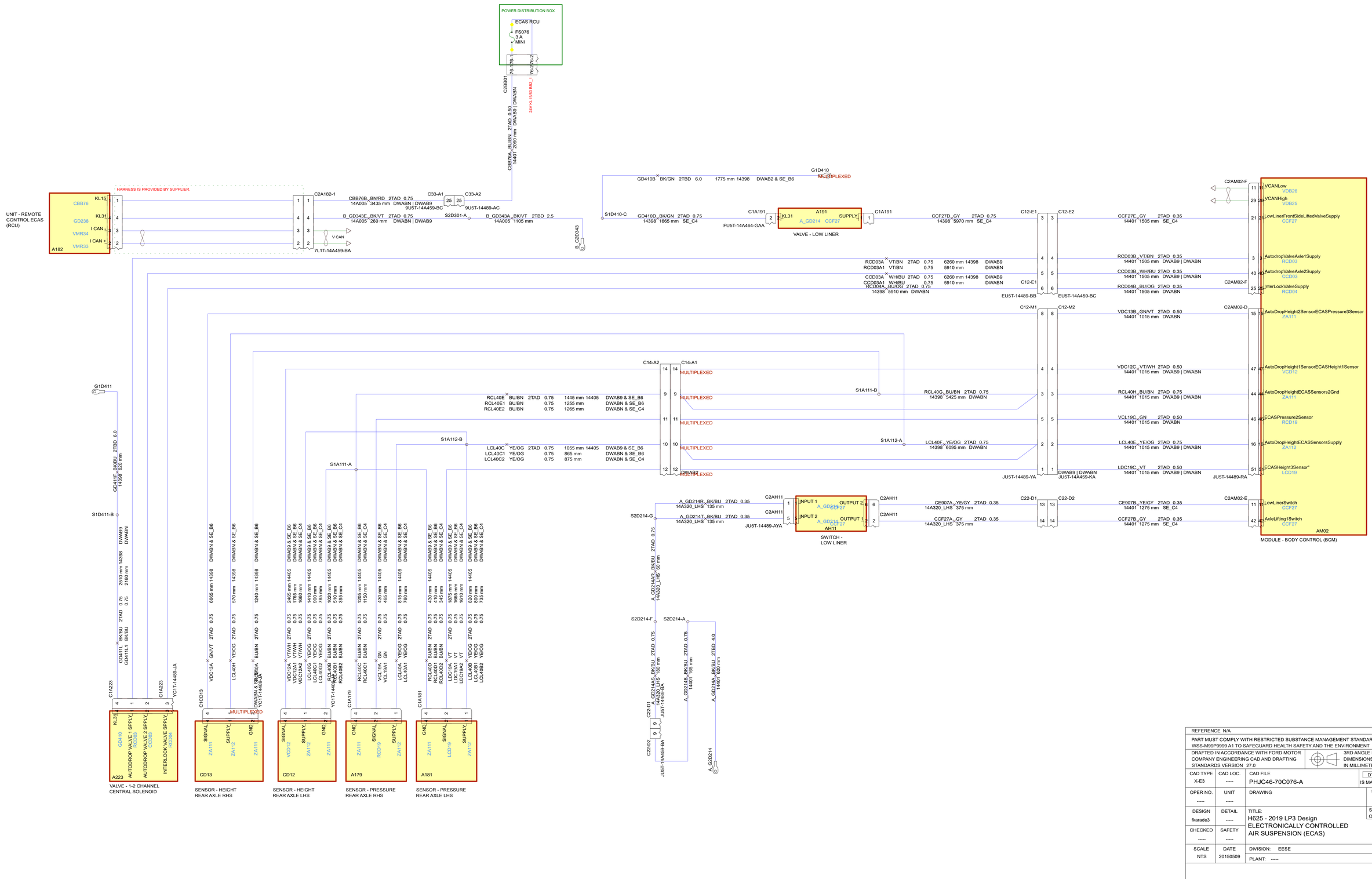

REFERENCE N/A			
PART MUST COMPLY WITH RESTRICTED SUBSTANCE MANAGEMENT STANDARD WSS-M99P9999 A1 TO SAFEGUARD HEALTH SAFETY AND THE ENVIRONMENT			
DRAFTED IN ACCORDANCE WITH FORD MOTOR COMPANY ENGINEERING CAD AND DRAFTING STANDARDS VERSION 27.0			3RD ANGLE PROJ DIMENSIONS ARE IN MILLIMETERS
CAD TYPE X-E3	CAD LOC. -----	CAD FILE PHJC46-70C076-A	DTM IS MASTER
OPER NO. -----	UNIT -----	DRAWING	SIZE A0
DESIGN fkarade3	DETAIL -----	TITLE: H625 - 2019 LP3 Design ELECTRONICALLY CONTROLLED AIR SUSPENSION (ECAS)	SHT 1 OF 1
CHECKED -----	SAFETY -----		
SCALE NTS	DATE 20150509	DIVISION: EESE	
		PLANT: -----	

PRINTED COPIES ARE UNCONTROLLED

LTRS	REVISIONS		
ORIGINATOR	CHECKER	ENGR APP	MATL APP

H625 2019 LP3 Design
C7.12 TIRE PRESSURE MONITORING SYSTEM (TPMS)

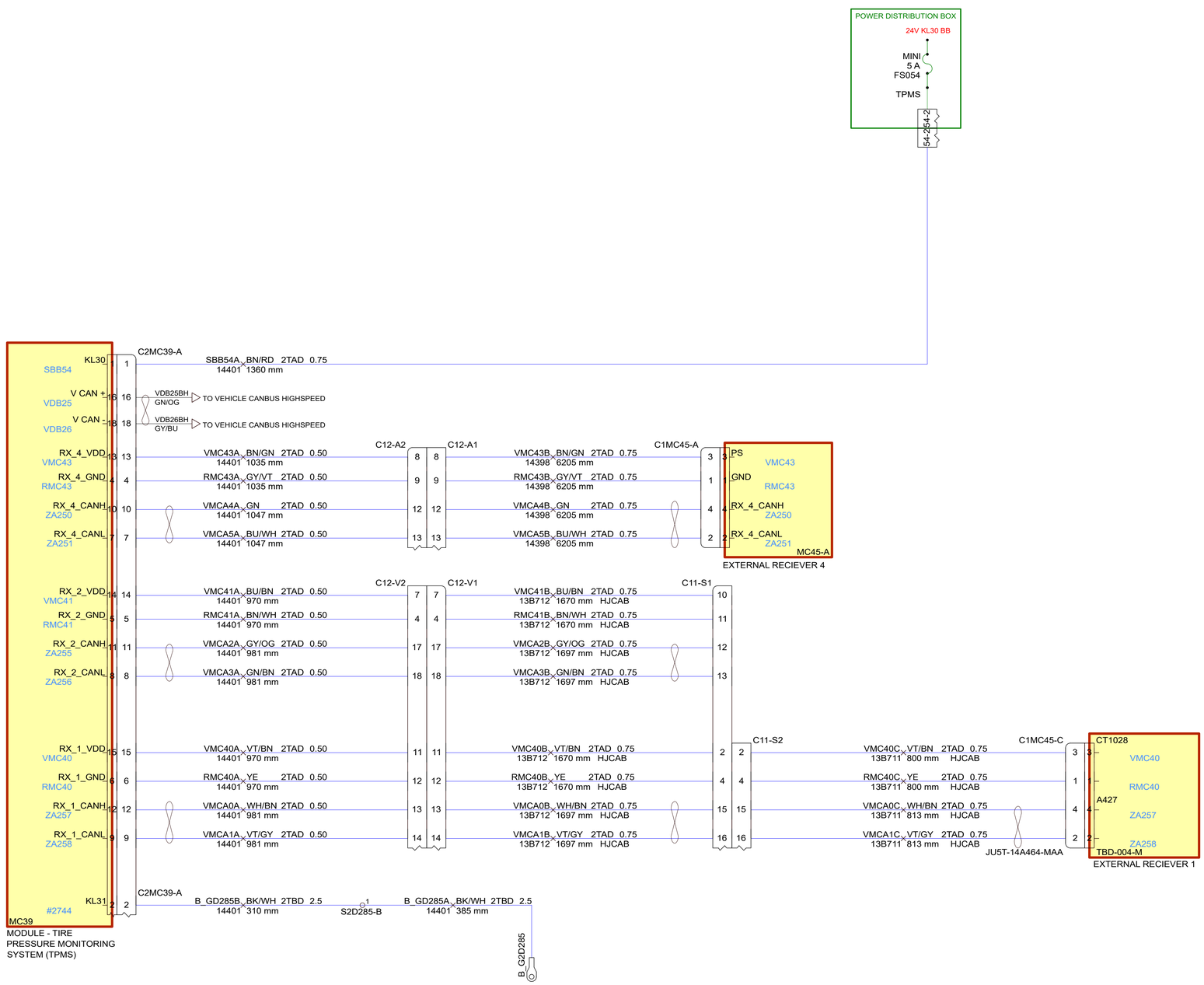

REFERENCE			
PART MUST COMPLY WITH RESTRICTED SUBSTANCE MANAGEMENT STANDARD WSS-M99P9999 A1 TO SAFEGUARD HEALTH SAFETY AND THE ENVIRONMENT			
DRAFTED IN ACCORDANCE WITH FORD MOTOR COMPANY ENGINEERING CAD AND DRAFTING STANDARDS VERSION 27.0		3RD ANGLE PROJ DIMENSIONS ARE IN MILLIMETERS	
CAD TYPE X-E3	CAD LOC. TCE	CAD FILE PHJC46-70C081-A	DTM IS MASTER
OPER NO. N/A	UNIT N/A	DRAWING	SIZE A1
DESIGN sakay	DETAIL -----	TITLE: H625 - 2019 LP3 Design TIRE PRESSURE MONITORING SYSTEM (TPMS)	SHT 1 OF 1
CHECKED -----	SAFETY MFG USE		
SCALE NTS	DATE 20120101	DIVISION: EESE	
		PLANT: N/A	

Modified By: NYAYLA1
Date Changed: 12/3/2019

H625 2019 LP3 Design
C7.01 - HORN

LTRS	REVISIONS		
ORIGINATOR	CHECKER	ENGR APP	MATL APP

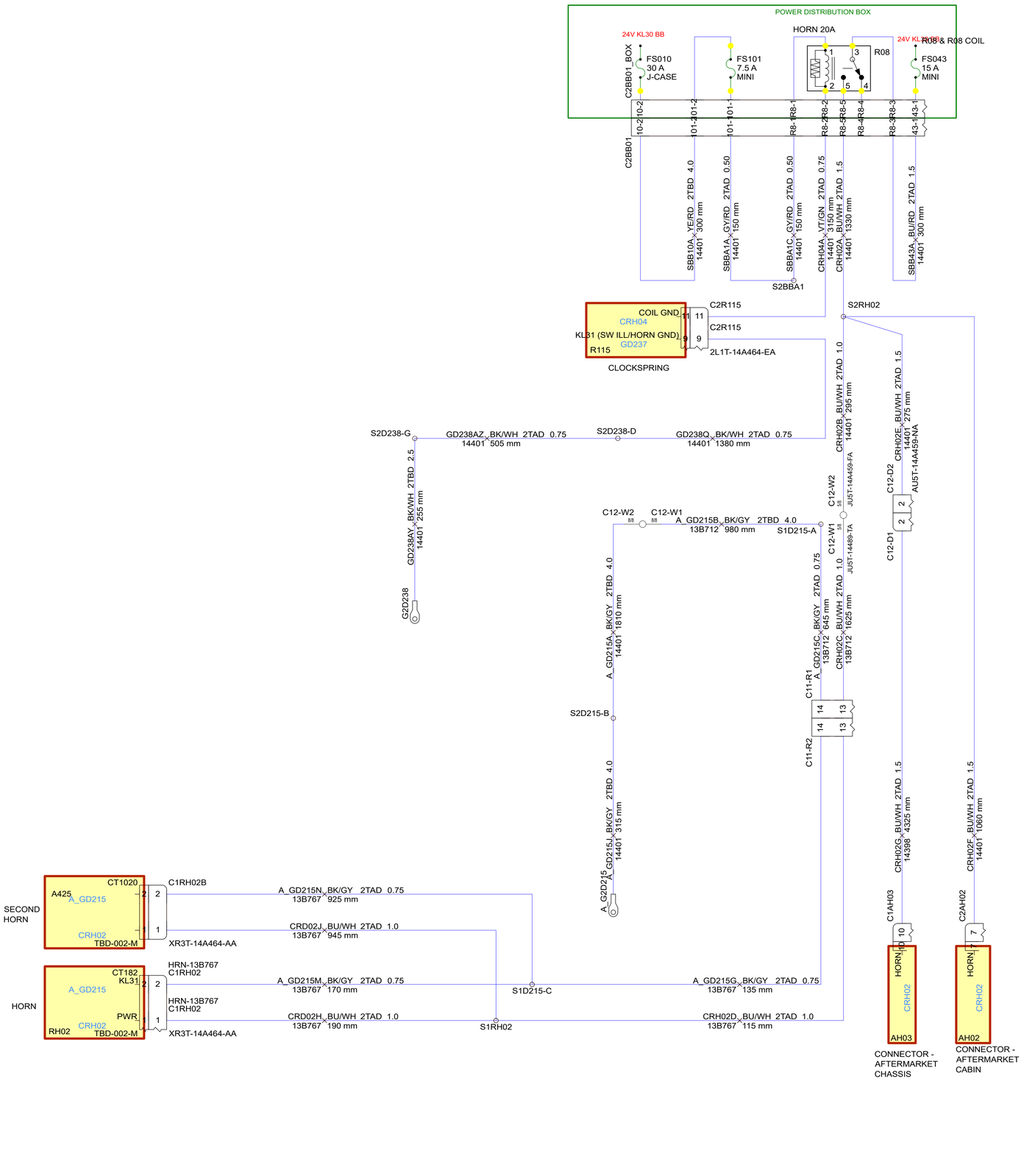

REFERENCE			
PART MUST COMPLY WITH RESTRICTED SUBSTANCE MANAGEMENT STANDARD WSS-M99P9999 A1 TO SAFEGUARD HEALTH SAFETY AND THE ENVIRONMENT			
DRAFTED IN ACCORDANCE WITH FORD MOTOR COMPANY ENGINEERING CAD AND DRAFTING STANDARDS VERSION 27.0		3RD ANGLE PROJ DIMENSIONS ARE IN MILLIMETERS	
CAD TYPE X-E3	CAD LOC. -----	CAD FILE PHJC46-70C082-A	DTM IS MASTER
OPER NO. -----	UNIT -----	DRAWING	SIZE A1
DESIGN agezer1	DETAIL -----	TITLE: H625 - 2019 LP3 Design HORN	SHT 1 OF 1
CHECKED -----	SAFETY -----		
SCALE NTS	DATE 20120101	DIVISION: EESE	
		PLANT: -----	

Modified By: ABEKEL
Date Changed: 11/20/2019

LTRS	REVISIONS		
ORIGINATOR	CHECKER	ENGR APP	MATL APP

H625 2019 LP3 Design
CX.X - BATTERY MONITORING SYSTEM

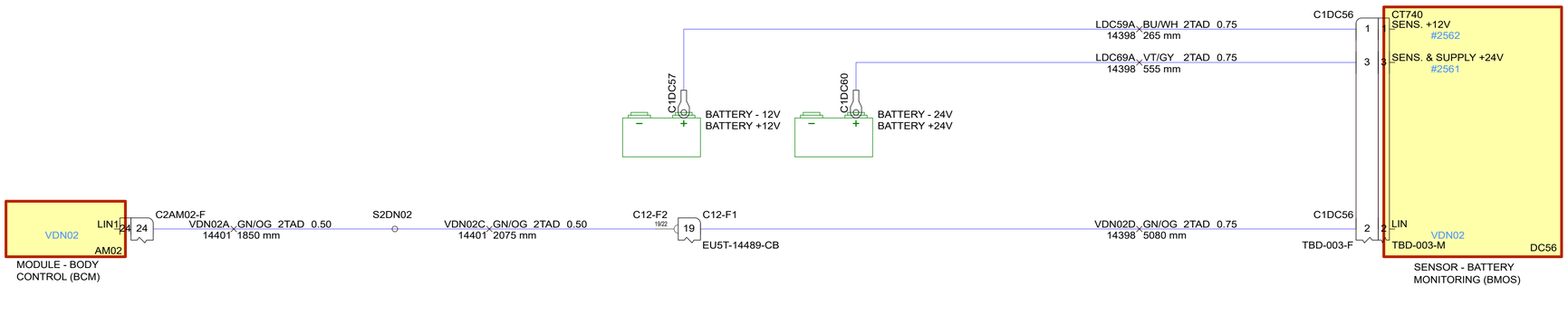

REFERENCE

PART MUST COMPLY WITH RESTRICTED SUBSTANCE MANAGEMENT STANDARD WSS-M99P9999 A1 TO SAFEGUARD HEALTH SAFETY AND THE ENVIRONMENT

DRAFTED IN ACCORDANCE WITH FORD MOTOR COMPANY ENGINEERING CAD AND DRAFTING STANDARDS VERSION 27.0

3RD ANGLE PROJ
DIMENSIONS ARE IN MILLIMETERS

CAD TYPE	CAD LOC.	CAD FILE	DTM
X-E3		PHJC46-70C091-A	IS MASTER

OPER NO.	UNIT	DRAWING	SIZE
N/A	N/A		A1

DESIGN	DETAIL	TITLE:	SHT 1 OF 1
fkarade3	-----	H625 - 2019 LP3 Design BATTERY MONITORING SYSTEM	
CHECKED	SAFETY		
-----	MFG USE		
SCALE	DATE	DIVISION: EESE	
N/A	20161212	PLANT: N/A	

Modified By: ABEKEL
Date Changed: 11/26/2019

H625 2019 LP3 Design
C9.03 - AUTOMATIC CLIMATE CONTROL

LTRS	REVISIONS			
ORIGINATOR	CHECKER	ENGR APP	MATL APP	

POWER DISTRIBUTION BOX

RAIN SENSOR & INCAR TEMP. / HUMIDITY SENSOR & HEADLAMP ASSEMBLIES LHS & RHS

C2BB01 BOX

FS093 7.5 A MINI

24V KL30 BB

FS010 30 A J-CASE

FS101 7.5 A MINI

A/C BLOWER MOTOR 40A

R10

24V KL30 BB

R10 & R10 COIL

FS007 30 A J-CASE

EATC

FS098 7.5 A MINI

93-103-1 | 93-283-2 | 10-210-2 | 101-101-2 | 101-101-1 | R10-R10-1 | R10-R10-2 | R10-R10-3 | R10-R10-4 | 7-2 | 98-198-1 | 98-298-2

C2BB01

CBB93A GY/BN 2TAD 0.50 14401 1215 mm

CDC778 VT 2TBD 4.0 14401 1155 mm

SBB10A YE/RD 2TBD 4.0 14401 300 mm

SBB1A GY/RD 2TAD 0.50 14401 150 mm

SBB1B GY/RD 2TAD 0.50 14401 150 mm

MH1223A VT/BN 2TAD 0.50 14401 1730 mm

SBB07A WH/RD 2TBD 4.0 14401 1600 mm

S2BBA1

B_CDC77H GY/YE 2TAD 4.0 14401 260 mm

B_CDC77D GY/YE 2TBD 2.5 14401 895 mm

S2DC77-B

B_CDC77C GY/YE 2TBD 2.5 15A404 2345 mm

B_CDC77K GY/YE 2TBD 2.5 15A404 200 mm

59DC77-B

C22-A2 C22-A1

9U5T-14489-AC

C9DC31

12V KL30 OUTPUT CDC77

C22-A2 C22-A1

9U5T-14489-AC

CDC78A VT/BN 2TBD 2.5 15A404 2545 mm

9U5T-14A459-BC

C9DC31

12V KL15 OUTPUT CDC78

TBD-015-M DC31

JU5T-14489-BHA

VOLTAGE CONVERTER - 2

BlowerControlRelaySupply

BlowerCtrlSwitch

C2AM02-C

C2AM02-E

5F1T-14489-AA

MODULE - BODY CONTROL (BCM)

CH402B BK/WH 2TAD 0.75 14401 1295 mm

C22-H1 C22-H2

CH402A YE/GN 2TAD 0.75 19C603 240 mm

C2H105-A

BLW MTR RELAY CBB94

12V KL30 VDB06

SBB98B GY/YE 2TAD 0.75 19C603 240 mm

C22-H2 C22-H1

SBB98A GY/YE 2TAD 1.0 14401 2035 mm

VREF LH111

LH111D BN/WH 2TAD 0.35 19C603 240 mm

DRV TEMP DOOR FEEDBACK VH440

VH440B BU/BN 2TAD 0.35 19C603 240 mm

DM TEMP LT C1 CH238

CH239B BU/WH 2TAD 0.35 19C603 240 mm

DM TEMP LT C2 CH238

CH238B YE/OG 2TAD 0.35 19C603 240 mm

KL31 GD237

GD238B BK/WH 2TAD 0.75 19C603 240 mm

LH111E BN/WH 2TAD 0.35 14401 175 mm

LH111K BN/WH 2TAD 0.35 S2H111-A 14401 630 mm

C22-G2 C22-G1

LH111F BN/WH 2TAD 0.35 19F561 485 mm

S2H111-B

VH440C BU/BN 2TAD 0.35 14401 765 mm

CH239C BU/WH 2TAD 0.35 14401 765 mm

CH238C YE/OG 2TAD 0.35 14401 765 mm

S2D238-G

GD238E BK/WH 2TAD 0.75 14401 550 mm

GD238AY BK/WH 2TBD 2.5 14401 255 mm

LH111G BN/WH 2TAD 0.35 19F561 315 mm

VH440D BU/BN 2TAD 0.35 19F561 800 mm

CH239D BU/WH 2TAD 0.35 19F561 800 mm

CH238D YE/OG 2TAD 0.35 19F561 800 mm

RH111S GY/BU 2TAD 0.35 19F561 155 mm

C2H232-A

POT + LH111

FEEDBACK VH440

MOTOR - CH238

MOTOR + CH238

POT - VH413

H232

MOTOR - DOOR TEMP.

G2D238

MODE DOOR FDBK VH437

VH437B VT/BN 2TAD 0.35 19C603 240 mm

DM P/F C1 FL CH202

CH203B GN/BN 2TAD 0.35 19C603 240 mm

DM P/F C2 PL CH202

CH202B BU/GN 2TAD 0.35 19C603 240 mm

VH437C VT/BN 2TAD 0.35 14401 765 mm

CH203C GN/BN 2TAD 0.35 14401 765 mm

CH202C BU/GN 2TAD 0.35 14401 765 mm

LH111H BN/WH 2TAD 0.35 19F561 480 mm

VH437D VT/BN 2TAD 0.35 19F561 215 mm

CH203D GN/BN 2TAD 0.35 19F561 215 mm

CH202D BU/GN 2TAD 0.35 19F561 215 mm

RH111R GY/BU 2TAD 0.35 19F561 640 mm

C2H228-A

POT + LH111

FEEDBACK VH437

MOTOR - CH202

MOTOR + CH202

POT - VH413

H228

MOTOR - DOOR DEFROST/PANEL/FLOOR

PIGTAIL

MOTOR - BLOWER

M -

M +

C2H102-B

VH440

PWM SPEED VH438

KL31 A_GD215

H102-A

MODULE - BLOWER SPEED CONTROL

CH446A YE/GN 2TBD 2.5 19F561 620 mm

C22-G1 C22-G2

CH446B YE/GN 2TBD 2.5 14401 1770 mm

VH101C WH/VT 2TAD 0.75 14401 765 mm

VH101B WH/VT 2TAD 0.75 19C603 240 mm

A_GD215K BK/GY 2TBD 2.5 19F561 620 mm

A_GD215H BK/GY 2TBD 2.5 14401 945 mm

S2D215-B

A_GD215J BK/GY 2TBD 4.0 14401 315 mm

A_G2D215

DOOR RECIRC FDBK VH438

VH438A GN/VT 2TAD 0.35 19C603 240 mm

DM RECIRC C1 CLOSE CH207

CH208B GN/OG 2TAD 0.35 19C603 240 mm

DM RECIRC C2 OPEN CH207

CH207B BU/GY 2TAD 0.35 19C603 240 mm

VH438C GN/VT 2TAD 0.35 14401 765 mm

CH208C GN/OG 2TAD 0.35 14401 765 mm

CH207C BU/GY 2TAD 0.35 14401 765 mm

LH111J BN/WH 2TAD 0.35 19F561 655 mm

VH438D GN/VT 2TAD 0.35 19F561 270 mm

RH111J GY/BU 2TAD 0.35 19F561 815 mm

CH208D GN/OG 2TAD 0.35 19F561 270 mm

CH207D BU/GY 2TAD 0.35 19F561 270 mm

RH111H GY/BU 2TAD 0.35 19F561 645 mm

S2H111-C

C2H206-A

POT + LH111

FEEDBACK VH438

POT - VH413

MOTOR + CH207

MOTOR + CH207

H206

MOTOR - DOOR RECIRC.

S2BB93

CBB93K GY/BN 2TAD 0.75 14401 1920 mm

C2H414

12V KL15 VBB11

INCAR TEMP VH414

HUMID NW413

ITS ASP MTR CBB94

VREF LH111

VREF RTN VH413

SENSOR - INCAR TEMP/HUMD.

VH414B GN/BU 2TAD 0.35 14401 910 mm

VH413B WH/BU 2TAD 0.35 14401 910 mm

RH103B GY 2TAD 0.35 14401 910 mm

LH111L BN/WH 2TAD 0.35 14401 735 mm

RH111E GY/BU 2TAD 0.35 14401 860 mm

S2H111-A

LH111E BN/WH 2TAD 0.35 14401 175 mm

VH414A GN/BU 2TAD 0.35 19C603 280 mm

VH413A WH/BU 2TAD 0.35 19C603 280 mm

RH103A GY 2TAD 0.35 19C603 280 mm

LH111D BN/WH 2TAD 0.35 19C603 240 mm

C2H105-B

INCAR TEMP VH414

HUMID SN VH413

ITS ASP MTR - CBB94

C2H105-A

VREF LH111

H105

CTRL MOD. - CLIMATE # ELECTRIC A/C

DISCHARGE TEMP. VH452

VREF RTN

H452

SENSOR - DISCHARGE TEMP. PANEL

C2H452

VH409A WH 2TAD 0.35 14401 575 mm

RH111K GY/BU 2TAD 0.35 14401 525 mm

VH409B WH 2TAD 0.35 19C603 280 mm

C2H105-B

DISCHARGE TEMP PANEL VH409

DISCHARGE TEMP FLOOR VH406

VH410A WH 2TAD 0.35 19C603 280 mm

VH410B WH 2TAD 0.35 14401 765 mm

RH111U GY/BU 2TAD 0.35 19F561 740 mm

VH410C WH 2TAD 0.35 19F561 315 mm

C2H408

VREF VH413

DISCHARGE TEMP VH406

H408

SENSOR - DISCHARGE TEMP. FLOOR

SN A/C EVAP TEMP VH406

VH406B VT/BN 2TAD 0.35 19C603 240 mm

VH406C VT/BN 2TAD 0.35 14401 765 mm

VH406D VT/BN 2TAD 0.35 19F561 405 mm

RH111P GY/BU 2TAD 0.35 19F561 390 mm

C2H406-A2

GND

PANEL OUTPUT

SENSOR - A/C EVAPORATOR TEMPERATURE (ACET)

RH111M GY/BU 2TAD 0.35 14401 505 mm

S2H111-A

S2RH111-A

RH111M GY/BU 2TAD 0.35 14401 505 mm

RH111L GY/BU 2TAD 0.35 14401 260 mm

RH111F GY/BU 2TAD 0.35 19C603 240 mm

C2H105-A

VREF RTN VH413

SN RTN

SUNLOAD LT

SUNLOAD RT

AMB TEMP SN

AMB TEMP

LF14

SENSOR - AUTOLAMP SUNLOAD (AMBIENT LIGHT)

C2LF14

RH111G GY/BU 2TAD 0.35 14401 2880 mm

VH416B VT/GY 2TAD 0.35 14401 3140 mm

VH417B YE/OG 2TAD 0.35 14401 3140 mm

VH416A VT/GY 2TAD 0.35 19C603 280 mm

VH417A YE/OG 2TAD 0.35 19C603 280 mm

C2H105-B

SUNLOAD LT VH416

SUNLOAD RT VH417

RLF14 GY/BN 2TAD 0.35 14401 2540 mm

VLF14 BU/BN 2TAD 0.35 14401 2540 mm

C2AM02-D

ECASPressure1Sensor RLF14

AmbientLightSensorGnd VLF14

AM02

JU5T-14489-RA

MODULE - BODY CONTROL (BCM)

REFERENCE N/A			
PART MUST COMPLY WITH RESTRICTED SUBSTANCE MANAGEMENT STANDARD WSS-M99P9999 A1 TO SAFEGUARD HEALTH SAFETY AND THE ENVIRONMENT			
DRAFTED IN ACCORDANCE WITH FORD MOTOR COMPANY ENGINEERING CAD AND DRAFTING STANDARDS VERSION 27.0		3RD ANGLE PROJ DIMENSIONS ARE IN MILLIMETERS	
CAD TYPE X-E3	CAD LOC. -----	CAD FILE PHJC46-70C122	DTM IS MASTER
OPER NO. -----	UNIT -----	DRAWING	SIZE A0
DESIGN sakay	DETAIL -----	TITLE: H625 - 2019 LP3 Design AUTOMATIC CLIMATE CONTROL	SHT 1 OF 1
CHECKED -----	SAFETY -----		
SCALE NTS	DATE 20160218	DIVISION: EESE	
		PLANT: -----	

PRINTED COPIES ARE UNCONTROLLED

SOURCE BY: 9000019 SHT1 11/04/2020

H625 2019 LP3 Design
C9.05 FUEL FIRED DRY TYPE HEATER

LTRS	REVISIONS		
ORIGINATOR	CHECKER	ENGR APP	MATL APP

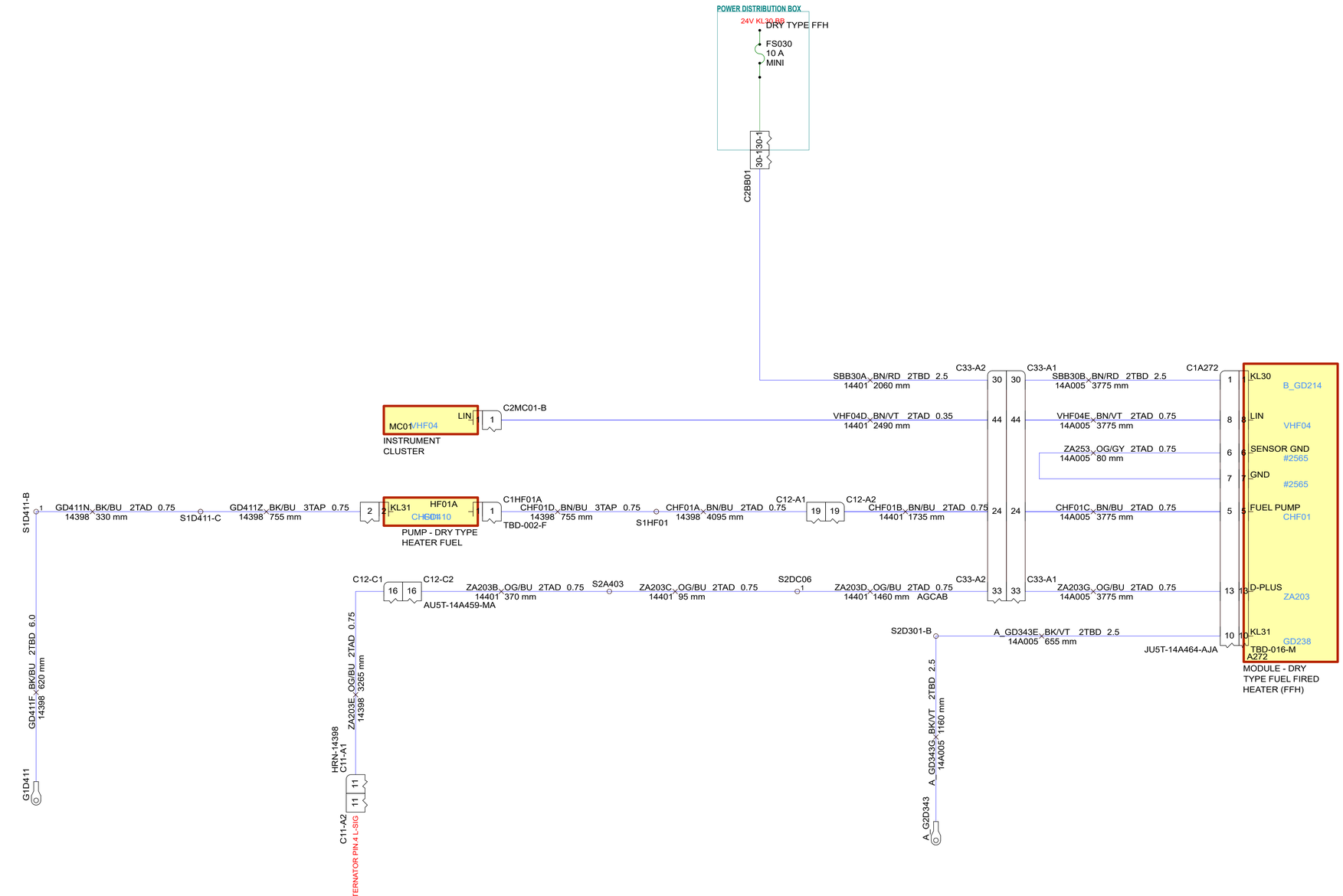

REFERENCE			
PART MUST COMPLY WITH RESTRICTED SUBSTANCE MANAGEMENT STANDARD WSS-M99P9999 A1 TO SAFEGUARD HEALTH SAFETY AND THE ENVIRONMENT			
DRAFTED IN ACCORDANCE WITH FORD MOTOR COMPANY ENGINEERING CAD AND DRAFTING STANDARDS VERSION 27.0		3RD ANGLE PROJ DIMENSIONS ARE IN MILLIMETERS	
CAD TYPE X-E3	CAD LOC.	CAD FILE PHJC46-70C124-A	DTM IS MASTER
OPER NO. N/A	UNIT N/A	DRAWING	SIZE A1
DESIGN agezer1	DETAIL -----	TITLE: H625 - 2019 LP3 Design FUEL FIRED DRY TYPE HEATER	SHT 1 OF 1
CHECKED -----	SAFETY MFG USE		
SCALE N/A	DATE 0	DIVISION: EESE	
		PLANT: N/A	

Modified By: IVYKLAS
Date Changed: 12/5/2019

LTRS	REVISIONS		
ORIGINATOR	CHECKER	ENGR APP	MATL APP

H625 2019 LP3 Design
C9.05 - FUEL FIRED WET TYPE HEATER

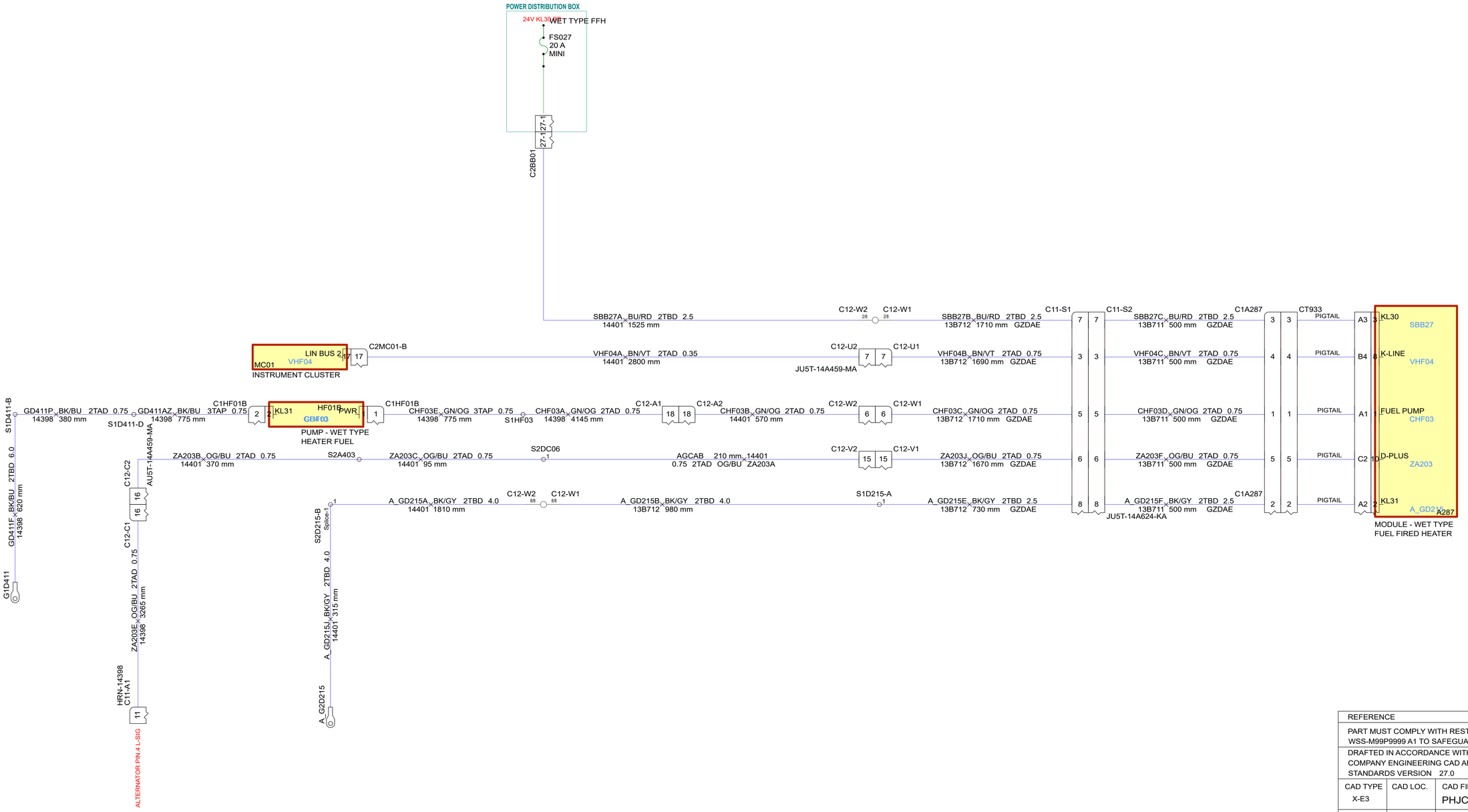

REFERENCE		
PART MUST COMPLY WITH RESTRICTED SUBSTANCE MANAGEMENT STANDARD WSS-M99P9999 A1 TO SAFEGUARD HEALTH SAFETY AND THE ENVIRONMENT		
DRAFTED IN ACCORDANCE WITH FORD MOTOR COMPANY ENGINEERING CAD AND DRAFTING STANDARDS VERSION 27.0		3RD ANGLE PROJ DIMENSIONS ARE IN MILLIMETERS
CAD TYPE X-E3	CAD LOC.	CAD FILE PHJC46-70C124-B / DTM IS MASTER
OPER NO. N/A	UNIT N/A	DRAWING / SIZE A1
DESIGN sakay	DETAIL -----	TITLE: H625 - 2019 LP3 Design FUEL FIRED WET TYPE HEATER / SHT 1 OF 1
CHECKED -----	SAFETY MFG USE	
SCALE N/A	DATE 0	DIVISION: EESE / PLANT: N/A

Modified By: NYAYLA1
Date Changed: 12/2/2019

H625 2019 LP3 Design
C10.01 - INTERIOR LIGHTING

LTRS	REVISIONS			
ORIGINATOR	CHECKER	ENGR APP	MATL APP	

POWER DISTRIBUTION BOX
24V KL-30 SWITCHES
FS045 3 A MINI
I45-145-1
C28B01

S4BB45
S2BB45
SBB45D_GY/RD_2TAD_0.50 14014 3550 mm
SBB45A_GY/RD_2TAD_0.75 14401 1000 mm
SBB45B_GY/RD_2TAD_0.50 14401 430 mm
SBB45C_GY/RD_2TAD_0.35 14401 570 mm
9U5T-14489-AC
C33-B1 26
C33-B2 26

A185 SWITCH - DOME & AMBIENT LAMPS BED
SBB45G_GY/RD_2TAD_0.35 14014 480 mm
SBB45H_GY/RD_2TAD_0.35 14014 480 mm
CLN04BB_BU/BN_2TAD_0.35 14014 1365 mm
MLN28E_BU/OG_2TAD_0.35 14014 4030 mm
CLN26E_BU 2TAD_0.35 14014 4030 mm
GD348E_BK/YE 2TAD_0.35 14014 2480 mm
C33-B1 C33-B2
MLN28F_BU/OG_2TAD_0.35 14401 390 mm
S2A399

A186 SWITCH - BED LIGHT & GLOBAL OFF BED
SBB45E_GY/RD_2TAD_0.50 14401 940 mm
SBB45T_GY/RD_2TAD_0.35 15B594 150 mm
SBB45U_GY/RD_2TAD_0.35 15B594 150 mm
HRN-15B594
C9A187
MLN28C_BU/OG_2TAD_0.35 15B594 1090 mm
CLN26F_BU 2TAD_0.35 15B594 1090 mm
CLN26B_BU 2TAD_0.35 14401 425 mm
CLN26D_BU 2TAD_0.35 15A404 2635 mm
S2LN26
C22-A2 C22-A1 49 49 9U5T-14489-AC
C99-A1 C99-A2 11 11
C99-A1 C99-A2 39 39

A186 SWITCH - DOME & AMBIENT LAMPS OHC
CLN04AN_BU/BN_2TAD_0.35 15A404 2635 mm
CLN04AP_BU/BN_2TAD_0.35 15B594 670 mm
CLN04AR_BU/BN_2TAD_0.35 15B594 420 mm
S9LN04-A
A_GD214AK_BK/BU_2TAD_0.35 15B594 240 mm
S9D214-E
C22-A2 C22-A1 50 50 9U5T-14489-AC
C99-A1 C99-A2 12 12
CLN04D_BU/BN_2TAD_0.35 14401 1125 mm

CLN04E_BU/BN_2TAD_0.35 14401 1250 mm
S2LN04-A
CLN04A_BU/BN_2TAD_0.75 14401 930 mm
C33-B2 6
C33-B1 6 9U5T-14489-AC
CLN04AZ_BU/BN_2TAD_0.35 14014 2665 mm
S4LN04-A
CLN04BA_BU/BN_2TAD_0.35 14014 1395 mm
C4A186
GD348T_BK/YE_2TAD_0.35 14014 710 mm
GD348A_BK/YE_2TAD_0.75 14014 2120 mm
GD348D_BK/YE_2TAD_0.35 14014 710 mm
JU5T-14489-BAA
S4D348-A
VLN74A_GN/BU_2TAD_0.35 14014 4060 mm
MLN40A_WH/BN 2TAD_0.35 14014 4060 mm
C33-B1 C33-B2
VLN74B_GN/BU_2TAD_0.35 14401 1025 mm
C2AM02-D
9U5T-14489-AC
MLN40B_WH/BN_2TAD_0.35 14401 955 mm
S2MLN40
MLN40C_WH/BN_2TAD_0.35 14401 105 mm
C2AM02-E
G2D348
GD348L_BK/YE_2TBD_2.5 14014 1665 mm
GD348B_BK/YE_2TAD_0.75 14014 320 mm
S4D348-C
S4D348-B
C2LN19B
3M5T-14489-BBA
MLN50B_BU/WH_2TAD_0.75 14014 4045 mm
3M5T-14489-BBA
C33-B1 C33-B2
MLN50A_BU/WH_2TAD_0.75 14401 1460 mm
C2AM02-F
9U5T-14489-AC
GD348K_BK/YE_2TAD_0.75 14014 2815 mm

LAMP - BED AREA
LAMP - DOOR TRIM PUDDLE RHS
LAMP - DOOR TRIM PUDDLE LHS
LAMP - STEPWELL LHS
LAMP - STEPWELL RHS
C6CLN32-B C6CLN32-A
C5CLN31-B C5CLN31-A
C1LN69 C1LN70
MLN31H_BK 2TAD_0.75 14K138 1160 mm
MLN31E_BK 2TAD_0.75 14A584 1165 mm
MLN31C_GN/BN 2TAD_0.75 14B242 3265 mm
MLN31A_GN/BN 2TAD_0.75 13B712 1450 mm
C36-A2 C36-C1 27 10 8V5T-14489-XB
C35-A2 C35-B1 14 2 8V5T-14489-VB
C12-X1 C12-X2 11 11 JU5T-14489-ACA
C12-U1 C12-U2 12 12 JU5T-14A459-MA
C36-C1 C36-A2 5 32 8V5T-14489-XB
C35-C1 C35-A2 5 32 8V5T-14489-XB
MLN31J_GN/BN 2TAD_0.35 14014 460 mm
MLN31F_GN/BN 2TAD_0.35 14A005 1660 mm
MLN31C_GN/BN 2TAD_0.75 14B242 3265 mm
MLN31A_GN/BN 2TAD_0.75 13B712 1450 mm
C33-B1 C33-B2 17 17 9U5T-14489-AC
C33-A1 C33-A2 11 11 9U5T-14489-BC
C33-A2 C33-A1 11 11 9U5T-14489-AC
C12-W1 C12-W2 18 18
MLN31K_GN/BN 2TAD_0.35 14401 770 mm
MLN31L_GN/BN 2TAD_0.35 14401 690 mm
MLN31I_BK 2TAD_0.75 14401 1170 mm
MLN31G_GN/BN 2TAD_0.35 14401 880 mm
MLN31B_GN/BN 2TAD_0.35 14401 790 mm
S2A374
GD348X_BK 2TAD_0.75 14K138 1170 mm
GD348J_BK 2TAD_0.75 14A584 1175 mm
GD216D_BK/VT 2TAD_0.75 13B712 850 mm
S1D216-A
GD216B_BK/VT 2TBD_2.5 13B712 620 mm
GD216A_BK/VT 2TBD_2.5 14401 620 mm
S2D216-C
GD216C_BK/VT 2TBD_2.5 14401 410 mm
G2D216
D216
A_G1D120
A_GD120B_BK/GN 2TAD_0.75 14B242 1000 mm
S1D120-A
A_GD120A_BK/GN 2TBD_4.0 14B242 665 mm
B_GD343C_BK/VT 2TAD_0.75 14A005 1975 mm
S2D301-A
B_GD343A_BK/VT 2TBD_2.5 14A005 1105 mm
B_G2D343
GD348W_BK/YE 2TAD_0.75 14014 1350 mm
S4D348-C
GD348L_BK/YE 2TBD_2.5 14014 1665 mm
G2D348

MapLampPassengerPWMSupply ZA298
AmbientLightSupply CLN58
AmbientLightSwitch (MapLampDriverPWMSupply CLN82
DomeLightSupply #2810
MapReadingLampDriverSideSwitch CLN19
BedAreaLightSwitch MapReadingLampPassSideSwitch VLN74 CLN20
InteriorLightDimmingSupply CBB60
InteriorLampOffSwitch MLN40
BedAreaLightingSupply MLN50
InteriorLightDimmingSupply (H62X)B60 MLN31
StepLightsSupply
AjarOnOffControl ZA231
DomeLampSwitch ZA399
C2AM02-C C2AM02-E C2AM02-F
5F1T-14489-AA C2AM02-F
5F1T-14489-AA
JU5T-14489-RA C2AM02-E
4S7T-14489-VMA
AM02 MODULE - BODY CONTROL (BCM)

MLNA1B_VT/GN_2TAD_0.75 14401 1195 mm
CLN58D_GY/OG_2TAD_0.35 14401 1335 mm
C22-A2 C22-A1 7 7 9U5T-14489-AC
MLNA1A_VT/GN_2TAD_0.35 15A404 3080 mm
CLN58C_GY/OG_2TAD_0.35 15A404 2025 mm
CLN58B_GY/OG_2TAD_0.35 15A404 2525 mm
CLN83B_GY/BU_2TAD_0.35 15A404 2235 mm
S9LN58
C9LN06 LN06
MAP RIGHT KL31
AMBIENT KL31
DOME KL31
LAMP - INTEGRATED DOME RHS
GD216AD_BK/VT 2TAD_0.35 15A404 2715 mm
GD216AE_BK/VT 2TAD_0.35 15A404 2715 mm
GD216AF_BK/VT 2TAD_0.35 15A404 2715 mm

MLNA0B_GY/BN 2TAD_0.35 14401 1195 mm
CLN58A_GY/OG 2TAD_0.35 15A404 2150 mm
CLN83A_GY/BU 2TAD_0.35 15A404 2440 mm
CLN83D_GY/BU 2TAD_0.35 15A404 1735 mm
C22-A2 C22-A1 9 9 9U5T-14489-AC
C22-A2 C22-A1 8 8 9U5T-14489-AC
S9LN83
MLNA0A_GY/BN 2TAD_0.35 15A404 4175 mm
C9LN02 LN02
MAP LEFT KL31
AMBIENT KL31
DOME KL31
LAMP - INTEGRATED DOME LHS
GD216AA_BK/VT 2TAD_0.35 15A404 1960 mm
GD216AB_BK/VT 2TAD_0.35 15A404 1960 mm
GD216AC_BK/VT 2TAD_0.35 15A404 1960 mm

CLN83C_GY/BU 2TAD_0.35 15A404 370 mm
C9LN19A LN19A DOME AJAR OUT
LAMP - MULTIFUNCTIONAL DOME
GD216AG_BK/VT 2TAD_0.35 15A404 490 mm
S9D216-E

CLN19B_GN/WH 2TAD_0.35 14A320_RHS 250 mm
CLN19A_GN/WH 2TAD_0.35 14401 1130 mm
CLN20B_GY/BN 2TAD_0.35 14A320_RHS 250 mm
CLN20A_GY/BN 2TAD_0.35 14401 1165 mm
CLN04BF_BU/BN 2TAD_0.35 14A320_RHS 150 mm
CLN04AL_BU/BN 2TAD_0.35 14A320_RHS 50 mm
S2LN04-G
S2LN04-E
C22-C2 C22-C1 22 22 23 23
OUTPUT INPUT 1
OUTPUT 2 GND
DIMMINGINPUT 2
LN12 SWITCH - MAP READING LAMP (IP)
GD214AW_BK/BU 2TAD_0.35 14A320_RHS 120 mm
GD214AV_BK/BU 2TAD_0.35 14A320_RHS 120 mm
GD214AX_BK/BU 2TAD_0.35 14A320_RHS 120 mm
S2D214-D
A_GD214AB_BK/BU 2TAD_0.75 14A320_RHS 130 mm
GD216Z_BK/VT 2TAD_0.75 14401 1175 mm
C22-A1 C22-C2 4 4 9U5T-14489-BC
A_GD214AC_BK/BU 2TAD_0.75 14401 175 mm
C22-A2 C22-C1 17 17 9U5T-14489-AC

CLN04AK_BU/BN 2TAD_0.35 14A320_RHS 50 mm
C22-C1 C22-C2 15 15
CLN04A_BU/BN 2TAD_0.75 14401 930 mm
CLN04D_BU/BN 2TAD_0.35 14401 1125 mm
S2LN04-A
CLN04C_BU/BN 2TAD_0.35 14401 245 mm
A_GD214A_BK/BU 2TBD 4.0 14401 620 mm
S2D214-A
A_G2D214
GD216G_BK/VT 2TAD_0.75 14401 1460 mm
9U5T-14489-AC

C22-A2 C22-A1 50 50 9U5T-14489-AC
CLN04AN_BU/BN 2TAD_0.35 15A404 2635 mm
CLN04AP_BU/BN 2TAD_0.35 15B594 670 mm
S9LN04-A
CLN04AS_BU/BN 2TAD_0.35 15B594 415 mm
C9A170 A170
DIMMING
OUTPUT 1 GND
SWITCH - AJAR ON/OFF OHC
A_GD214AG_BK/BU 2TAD_0.35 15B594 235 mm
C99-A2 C99-A1 27 27
A_GD214AF_BK/BU 2TAD_0.75 15B594 850 mm
S9D214-E
G2D216
GD216C_BK/VT 2TBD_2.5 14401 410 mm
S2D216-C
C22-F2 C22-F1 10 10 JU5T-14A459-AA
MLN36B_BU/GN 2TAD_0.35 15A404 2760 mm
MLN36A_BU/GN 2TAD_0.35 14401 860 mm
MLN36C_BU/GN 2TAD_0.35 15B594 1085 mm
C99-A2 C99-A1 43 43
C22-A2 C22-A1 18 18 9U5T-14A459-BC
A_GD214N_BK/BU 2TAD_0.75 15A404 2635 mm
S2D214-A
A_GD214E_BK/BU 2TAD_0.75 14401 1375 mm
A_GD214A_BK/BU 2TBD 4.0 14401 620 mm
A_G2D214

C22-A1 C22-A2 18 18 9U5T-14A459-BC
A_GD214N_BK/BU 2TAD_0.75 15A404 2635 mm
A_GD214E_BK/BU 2TAD_0.75 14401 1375 mm
9U5T-14489-AC
S2D214-A
A_GD214A_BK/BU 2TBD 4.0 14401 620 mm
A_G2D214

REFERENCE N/A

PART MUST COMPLY WITH RESTRICTED SUBSTANCE MANAGEMENT STANDARD WSS-M99P9999 A1 TO SAFEGUARD HEALTH SAFETY AND THE ENVIRONMENT

DRAFTED IN ACCORDANCE WITH FORD MOTOR COMPANY ENGINEERING CAD AND DRAFTING STANDARDS VERSION 27.0

3RD ANGLE PROJ
DIMENSIONS ARE IN MILLIMETERS

CAD TYPE	CAD LOC.	CAD FILE	DTM
X-E3	TCE	PHJC46-70C140-A	IS MASTER
OPER NO.	UNIT	DRAWING	SIZE
N/A	N/A		A0
DESIGN	DETAIL	TITLE:	SHT 1 OF 1
sakay	-----	H625 - 2019 LP3 Design INTERIOR LIGHTING	
CHECKED	SAFETY		
-----	MFG USE		
SCALE	DATE	DIVISION: EESE	
NTS	20120101	PLANT: N/A	

WSS-M1P-[illegible]
ABCXCL 11/25/2009

PRINTED COPIES ARE UNCONTROLLED

LTRS	REVISIONS		
ORIGINATOR	CHECKER	ENGR APP	MATL APP

H625 2019 LP3 Design
C10.02 - INTERIOR LIGHTING 2

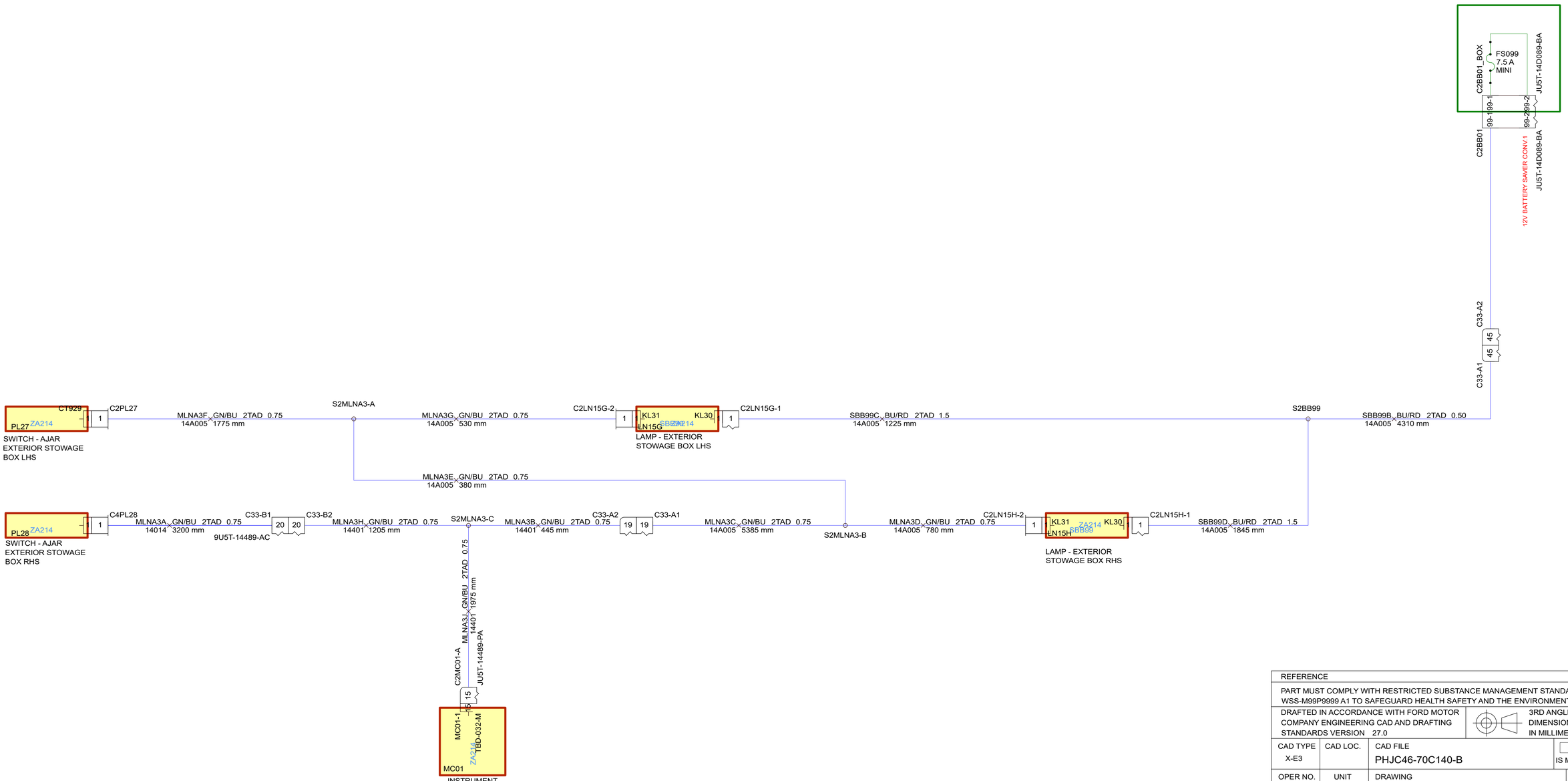

REFERENCE			
PART MUST COMPLY WITH RESTRICTED SUBSTANCE MANAGEMENT STANDARD WSS-M99P9999 A1 TO SAFEGUARD HEALTH SAFETY AND THE ENVIRONMENT			
DRAFTED IN ACCORDANCE WITH FORD MOTOR COMPANY ENGINEERING CAD AND DRAFTING STANDARDS VERSION 27.0			3RD ANGLE PROJ DIMENSIONS ARE IN MILLIMETERS
CAD TYPE X-E3	CAD LOC.	CAD FILE PHJC46-70C140-B	DTM IS MASTER
OPER NO. N/A	UNIT N/A	DRAWING	SIZE A1
DESIGN sakay	DETAIL -----	TITLE: H625 - 2019 LP3 Design INTERIOR LIGHTING 2	SHT 1 OF 1
CHECKED -----	SAFETY MFG USE		
SCALE N/A	DATE 0	DIVISION: EESE	
		PLANT: N/A	

Modified By: ABEKEL
Date Changed: 11/22/2019

H625 2019 LP3 Design
C10.03 - IP & SWITCH ILLUMINATION

LTRS	REVISIONS		
ORIGINATOR	CHECKER	ENGR APP	MATL APP

SWITCH - ACCESSORY (WORK) LAMP
CT982 DIMMING 4 — CBB60 — C2A420 4
CLN04BP_BU/BN_2TAD_0.35 14401 1495 mm
CLN04B_BU/BN_2TAD_0.35 14401 355 mm
S2LN04-A
CLN04A_BU/BN_2TAD_0.75 14401 930 mm
C2AM02-C 15 — 5F1T-14489-AA
InteriorLightDimmingSupply — CBB60 — AM02
MODULE - BODY CONTROL (BCM)
CLN04E_BU/BN_2TAD_0.35 14401 1250 mm
CLN04D_BU/BN_2TAD_0.35 14401 1125 mm
C22-A2 50 — C22-A1 50 — 9U5T-14489-AC
CLN04AN_BU/BN_2TAD_0.35 15A404 2635 mm
C22-D2 30 — C22-D1 30
CLN04T_BU/BN_2TAD_0.35 14A320_LHS 120 mm
CLN04C_BU/BN_2TAD_0.35 14401 245 mm
C22-C2 15 — C22-C1 15
CLN04AK_BU/BN_2TAD_0.35 14A320_RHS 50 mm
C99-A1 12 — C99-A2 12
CLN04AP_BU/BN_2TAD_0.35 15B594 670 mm
C33-B2 6 — C33-B1 6
9U5T-14489-AC
CLN04AZ_BU/BN_2TAD_0.35 14014 2665 mm
CLN04AL_BU/BN_2TAD_0.35 14A320_RHS 50 mm
S2LN04-G
CLN04AM_BU/BN_2TAD_0.35 14A320_RHS 80 mm
S2LN04-B
S2LN04-E
S2LN04-F
S9LN04-A
S4LN04-A

SWITCH - TRAILER BRAKE — C1681 INPUT 1 — ACRB204 A390 — C2A390 — CLN04J_BU/BN_2TAD_0.35 14A320_LHS 270 mm
SWITCH - LOW LINER — C1681 GND — ACRB204 A388 — C2AH11 — CLN04K_BU/BN_2TAD_0.35 14A320_LHS 255 mm
SWITCH - POWER TAKE OFF (PTO) — C1682 COMMON GND — DIMMING — ACRB204 A391 — C2E912 — CLN04L_BU/BN_2TAD_0.35 14A320_LHS 255 mm
SWITCH - TRAILER TAG AXLE LIFTER — C1682 GND — ACRB204 A385 — C2A385 — CLN04Y_BU/BN_2TAD_0.35 14A320_LHS 225 mm
SWITCH - AUXILIARY HEATER IP (DRY) — C1682 COMMON GND — ACRB204 A391 — C2A391 — CLN04M_BU/BN_2TAD_0.35 14A320_LHS 235 mm
SWITCH - AUXILIARY HEATER IP (DRY+WET) — C1684 GND — ACRB204 A393 — C2A393 — CLN04P_BU/BN_2TAD_0.35 14A320_LHS 235 mm
SWITCH - BLENDING — C1680 COMMON GND — ACRB204 A388 — C2A388 — CLN04AC_BU/BN_2TAD_0.35 14A320_RHS 150 mm
SWITCH - HILL HOLDER — C1680 INPUT 1 — ACRB204 A389 — C2A389 — CLN04AB_BU/BN_2TAD_0.35 14A320_RHS 150 mm
SWITCH - DIFFERENTIAL LOCK — C1483 COMMON GND — ACRB204 A369 — C2A369 — CLN04Y_BU/BN_2TAD_0.35 14A320_RHS 150 mm
SWITCH - AUTOMATIC TRANSMISSION POWER / ROCKING (AMT) — C1680 GND — ACRB204 A176 — C2A176 — CLN04AG_BU/BN_2TAD_0.35 14A320_RHS 120 mm
SWITCH - LANE DEPARTURE WARNING SYSTEM (LDWS) — GND — ACRB204 RB05 — C2RB05 — CLN04E_BU/BN_2TAD_0.35 14A320_RHS 120 mm
SWITCH - ELECTRONIC STABILITY PROGRAM (ESP) — C1687 GND — DIMMING — ACRB204 A396 — TBD-006-M — C2A396 — CLN04AH_BU/BN_2TAD_0.35 14A320_RHS 120 mm
SWITCH - DIESEL PARTICULATE REGENERATIVE / INHIBITOR (DPF) — C1687 GND — DIMMING — ACRB204 E702 — TBD-006-M — C2E702 — CLN04AF_BU/BN_2TAD_0.35 14A320_RHS 220 mm
SWITCH - ACTIVE EMERGENCY BRAKING SYSTEM (AEBS) — C1680 GND — ACRB204 A199 — C2A199 — CLN04AD_BU/BN_2TAD_0.35 14A320_RHS 120 mm
SWITCH - DOME & AMBIENT LAMPS OHC — C1680 GND — DIMMING — ACRB204 A187 — C9A187 — CLN04AR_BU/BN_2TAD_0.35 15B594 420 mm
SWITCH - AJAR ON/OFF OHC — C1388 GND — DIMMING — ACRB204 A170 — C9A170 — CLN04AS_BU/BN_2TAD_0.35 15B594 415 mm
SWITCH - SUNROOF OHC — C1686 GND — DIMMING — TBD-006-M — C9PR40-A — CLN04AT_BU/BN_2TAD_0.35 15B594 400 mm
SWITCH - [illegible] — C1686 GND — DIMMING — ACRB204 A292 — C9A292 — CLN04AU_BU/BN_2TAD_0.35 15B594 415 mm
SWITCH - TRIPLE ROOF MARKER LAMPS — C1419 GND — DIMMING — ACRB204 A320 — C9A320 — CLN04AY_BU/BN_2TAD_0.35 15B594 450 mm
SWITCH - BED LIGHT & GLOBAL OFF BED — C1686 GND — DIMMING — SRB204 A186 — C4A186 — CLN04BA_BU/BN_2TAD_0.35 14014 1395 mm — JU5T-14489-BAA
SWITCH - AUXILIARY HEATER BED (DRY) — C1301 COMMON GND — DIMMING — TBD-006-M — C2A277 — CLN04BD_BU/BN_2TAD_0.35 14014 1365 mm GZDAA
SWITCH - RADIO CONTROL BED — C1314 GND — DIMMING — SRB204 A278 — C4A278 — CLN04BC_BU/BN_2TAD_0.35 14014 1345 mm
SWITCH - AUXILIARY HEATER BED (DRY+WET) — C1686 GND — DIMMING — TBD-006-M — C4A417 — CLN04BM_BU/BN_2TAD_0.35 14014 1415 mm GZDAE
SWITCH - DOME & AMBIENT LAMPS BED — C1686 GND — DIMMING — SRB204 A185 — C2A185 — CLN04BB_BU/BN_2TAD_0.35 14014 1365 mm
SWITCH - SUNROOF BED — C1317 GND — DIMMING — SRB204 PR40B — C4PR40B — CLN04BE_BU/BN_2TAD_0.35 14014 1355 mm — JU5T-14489-AXA

A_GD214K_BK/BU_2TAD_0.35 14A320_LHS 150 mm — S2D214-G
A_GD214J_BK/BU_2TAD_0.35 14A320_LHS 135 mm
A_GD214L_BK/BU_2TAD_0.35 14A320_LHS 135 mm
A_GD214G_BK/BU_2TAD_0.35 14A320_LHS 105 mm
A_GD214M_BK/BU_2TAD_0.35 14A320_LHS 175 mm
A_GD214P_BK/BU_2TAD_0.35 14A320_LHS 175 mm — S2D214-F
A_GD214AR_BK/BU_2TAD_0.75 14A320_LHS 60 mm
A_GD214V_BK/BU_2TAD_0.35 14A320_RHS 190 mm
A_GD214U_BK/BU_2TAD_0.35 14A320_RHS 190 mm
A_GD214S_BK/BU_2TAD_0.35 14A320_RHS 190 mm — S2D214-H
A_GD214Y_BK/BU_2TAD_0.35 14A320_RHS 150 mm
A_GD214X_BK/BU_2TAD_0.35 14A320_RHS 135 mm
A_GD214AA_BK/BU_2TAD_0.35 14A320_RHS 135 mm — S2D214-J
A_GD214Q_BK/BU_2TAD_0.35 14A320_RHS 205 mm
A_GD214W_BK/BU_2TAD_0.35 14A320_RHS 135 mm
A_GD214AT_BK/BU_2TAD_0.75 14A320_RHS 70 mm — S2D214-D
A_GD214AU_BK/BU_2TAD_0.75 14A320_RHS 85 mm
A_GD214K_BK/BU_2TAD_0.35 15B594 240 mm — JU5T-14489-BAA
A_GD214AG_BK/BU_2TAD_0.35 15B594 235 mm — JU5T-14489-ATA
A_GD214Z_BK/BU_2TAD_0.35 15B594 220 mm — S9D214-E
A_GD214AX_BK/BU_2TAD_0.35 15B594 235 mm — JU5T-14489-AXA
A_GD214AV_BK/BU_2TAD_0.35 15B594 270 mm — JU5T-14489-ARA
GD348D_BK/YE_2TAD_0.35 14014 710 mm — JU5T-14489-BAA
GD348G_BK/YE_2TAD_0.35 14014 680 mm GZDAA — JU5T-14489-AZA — S4D348-A
GD348F_BK/YE_2TAD_0.35 14014 660 mm — JU5T-14489-BBA
GD348N_BK/YE_2TAD_0.35 14014 730 mm GZDAE — JU5T-14489-AZE
GD348E_BK/YE_2TAD_0.35 14014 2480 mm — JU5T-14489-AYA — S4D348-B
GD348Q_BK/YE_2TAD_0.35 14014 2470 mm — JU5T-14489-AXA

A_GD214AS_BK/BU_2TAD_0.75 14A320_LHS 180 mm — C22-D1 9 — C22-D2 9
A_GD214B_BK/BU_2TAD_0.75 14401 165 mm — S2D214-A
A_GD214AC_BK/BU_2TAD_0.75 14401 175 mm
A_GD214AB_BK/BU_2TAD_0.75 14A320_RHS 130 mm — C22-C1 4 — C22-C2 4
A_GD214A_BK/BU_2TBD_4.0 14401 620 mm — A_G2D214
C22-A2 18 — C22-A1 18 — 9U5T-14489-AC
A_GD214N_BK/BU_2TAD_0.75 15A404 2635 mm — C99-A1 27 — C99-A2 27
A_GD214AF_BK/BU_2TAD_0.75 15B594 850 mm
A_GD214E_BK/BU_2TAD_0.75 14401 1375 mm
A_GD214A_BK/BU_2TBD_4.0 14401 620 mm — S2D214-A — A_G2D214
GD348A_BK/YE_2TAD_0.75 14014 2120 mm
GD348B_BK/YE_2TAD_0.75 14014 320 mm — S4D348-C
GD348H_BK/YE_2TBD_2.5 14014 1665 mm — G2D348

REFERENCE

PART MUST COMPLY WITH RESTRICTED SUBSTANCE MANAGEMENT STANDARD WSS-M99P9999 A1 TO SAFEGUARD HEALTH SAFETY AND THE ENVIRONMENT

DRAFTED IN ACCORDANCE WITH FORD MOTOR COMPANY ENGINEERING CAD AND DRAFTING STANDARDS VERSION 27.0

3RD ANGLE PROJ
DIMENSIONS ARE IN MILLIMETERS

CAD TYPE	CAD LOC.	CAD FILE	DTM
X-E3	TCE	PHJC46-70C142-A	IS MASTER
OPER NO.	UNIT	DRAWING	SIZE
N/A	N/A		A1
DESIGN	DETAIL	TITLE:	SHT 1
sakay	-----	H625 - 2019 LP3 Design	OF 1
CHECKED	SAFETY	IP & SWITCH ILLUMINATION	
-----	MFG USE		
SCALE	DATE	DIVISION: EESE	
NTS	20120101	PLANT: N/A	

Modified By: NYKYLA1
Date Changed: 12/5/2019

LTRS	REVISIONS			
ORIGINATOR	CHECKER	ENGR APP	MATL APP	

H625 2019 LP3 Design
C11.01 - HEAD LIGHTING - LED

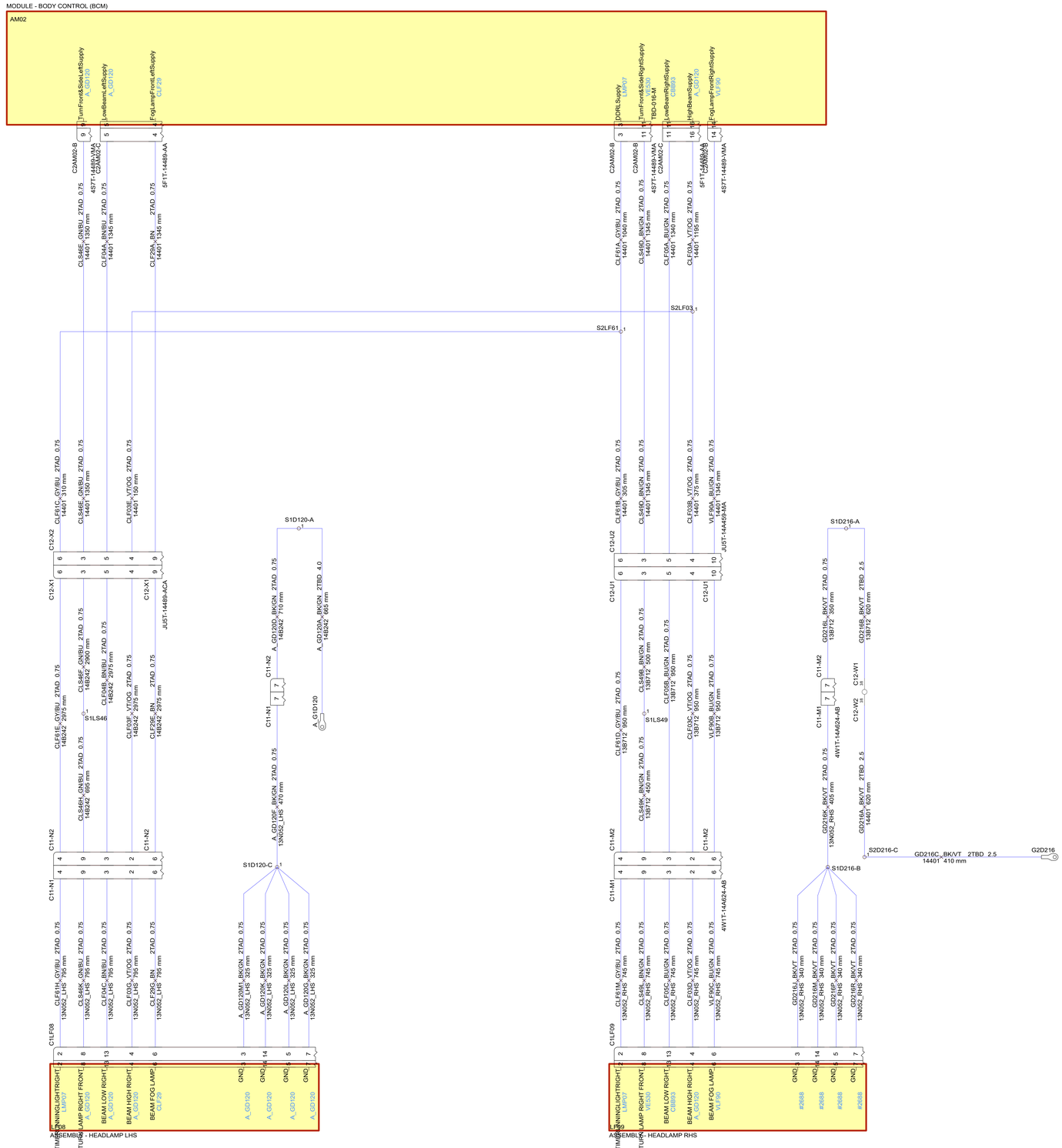
MODULE - BODY CONTROL (BCM)
AM02
TurnFrontASideLeftSupply
A_GD120
LowBeamLeftSupply
A_GD120
FogLampFrontLeftSupply
C2F 25
DDRLSupply
LMPU7
TurnFrontASideRightSupply
TBD-018-M
LowBeamRightSupply
CB4B3
HighBeamSupply
A_GD120
FogLampFrontRightSupply
V1F25
C2AM02-B
C2AM02-C
4S7T-14489-VMA
5F1T-14489-AA
CLS46E_GNBU 27AD 0.75 14401 1350 mm
CLF04A_BNBU 27AD 0.75 14401 1345 mm
CLF23A_BN 27AD 0.75 14401 1345 mm
CLF61A_GYBU 27AD 0.75 14401 1040 mm
CLS49D_BNGN 27AD 0.75 14401 1345 mm
CLF05A_BUGN 27AD 0.75 14401 1349 mm
CLF23A_VTOG 27AD 0.75 14401 1165 mm
S2LF03
S2LF61
CLF61C_GYBU 27AD 0.75 14401 310 mm
CLS46E_GNBU 27AD 0.75 14401 1350 mm
CLF03E_VTOG 27AD 0.75 14401 160 mm
CLF61B_GYBU 27AD 0.75 14401 305 mm
CLS49D_BNGN 27AD 0.75 14401 1345 mm
CLF03B_VTOG 27AD 0.75 14401 370 mm
V1F06A_BUGN 27AD 0.75 14401 1354 mm
JU5T-14A459-MA
S1D120-A
S1D216-A
C12-X2
C12-X1
C12-U2
C12-U1
JU5T-14489-ACA
CLF61E_GYBU 27AD 0.75 14B242 2975 mm
CLS46F_GNBU 27AD 0.75 14B242 2900 mm
CLF04B_BNBU 27AD 0.75 14B242 2975 mm
CLF03E_VTOG 27AD 0.75 14B242 2975 mm
CLF23E_BN 27AD 0.75 14B242 2975 mm
CLS49E_BNGN 27AD 0.75 13B712 500 mm
CLF05B_BUGN 27AD 0.75 13B712 990 mm
CLF23C_VTOG 27AD 0.75 13B712 950 mm
V1F06B_BUGN 27AD 0.75 13B712 930 mm
A_GD120D_BKGN 27AD 0.75 14B242 710 mm
A_GD120A_BKGN 2TBD 4.0 14B242 665 mm
GD216L_BKVT 27AD 0.75 13B712 350 mm
GD216B_BKVT 2TBD 2.5 13B712 625 mm
S1LS46
S1LS49
C11-N1
C11-N2
C11-M1
C11-M2
C11-N7
C11-M2
CLS46H_GNBU 27AD 0.75 14B242 695 mm
CLF61D_GYBU 27AD 0.75 13B712 960 mm
A_GD120F_BKGN 27AD 0.75 13N052_LHS 470 mm
4W1T-14A624-AB
GD216K_BKVT 27AD 0.75 13N052_RHS 405 mm
GD216A_BKVT 2TBD 2.5 14401 620 mm
C12-W1
C12-W2
S2D216-C
GD216C_BKVT 2TBD 2.5 14401 410 mm
G2D216
S1D120-C
S1D216-B
CLF61H_GYBU 27AD 0.75 13N052_LHS 795 mm
CLS46K_GNBU 27AD 0.75 13N052_LHS 795 mm
CLF04C_BNBU 27AD 0.75 13N052_LHS 795 mm
CLF03D_VTOG 27AD 0.75 13N052_LHS 795 mm
CLF23G_BN 27AD 0.75 13N052_LHS 795 mm
A_GD120M1_BKGN 27AD 0.75 13N052_LHS 325 mm
A_GD120K_BKGN 27AD 0.75 13N052_LHS 325 mm
A_GD120L_BKGN 27AD 0.75 13N052_LHS 325 mm
A_GD120G_BKGN 27AD 0.75 13N052_LHS 325 mm
CLF61M_GYBU 27AD 0.75 13N052_RHS 745 mm
CLS49L_BNGN 27AD 0.75 13N052_RHS 745 mm
CLF05C_BUGN 27AD 0.75 13N052_RHS 745 mm
CLF03D_VTOG 27AD 0.75 13N052_RHS 745 mm
V1F06C_BUGN 27AD 0.75 13N052_RHS 745 mm
GD216J_BKVT 27AD 0.75 13N052_RHS 340 mm
GD216M_BKVT 27AD 0.75 13N052_RHS 340 mm
G2D216P_BKVT 27AD 0.75 13N052_RHS 340 mm
G2D216R_BKVT 27AD 0.75 13N052_RHS 340 mm
C1LF58
C1LF59
#2888
DAYTIME RUNNING LIGHT RIGHT
TURN LAMP RIGHT FRONT
BEAM LOW RIGHT
BEAM HIGH RIGHT
BEAM FOG LAMP
GND
A_GD120
A_VE330
A_GD1B3
C2F 25
LMHU7
A_GD1D8
A_GD1D9
A_GD1D10
A_GD1D11
A_GD1D12
A_GD1D13
A_GD1D14
A_GD1D15
A_GD1D16
A_GD1D17
A_GD1D18
A_GD1D19
A_GD1D20
A_GD1D21
A_GD1D22
A_GD1D23
A_GD1D24
A_GD1D25
A_GD1D26
A_GD1D27
A_GD1D28
A_GD1D29
A_GD1D30
A_GD1D31
A_GD1D32
A_GD1D33
A_GD1D34
A_GD1D35
A_GD1D36
A_GD1D37
A_GD1D38
A_GD1D39
A_GD1D40
A_GD1D41
A_GD1D42
A_GD1D43
A_GD1D44
A_GD1D45
A_GD1D46
A_GD1D47

H625 2019 LP3 Design
C11.01 - FOG LIGHTING

LTRS	REVISIONS		
ORIGINATOR	CHECKER	ENGR APP	MATL APP

POWER DISTRIBUTION BOX
12V KL30 CONV.2
HEADLAMP SW.
FS100
3 A
MINI
100-1
SBBA0A GN/RD 2TAD 0.35
14401 3180 mm

C2LF23
12V KL30
SBBA0
LIN
VDN01
KL31
LF23 GD237
SWITCH - HEADLAMP
VDN01G BU/WH 2TAD 0.50
14401 1765 mm
S2DN01
VDN01A BU/WH 2TAD 0.50
14401 825 mm
C2AM02-F
LIN_IPSwitch
VDN01
C2LF23
GD238AP BK/WH 2TAD 0.75
14401 1410 mm
S2D238-D
GD238AZ BK/WH 2TAD 0.75
14401 505 mm
S2D238-G
GD238AY BK/WH 2TBD 2.5
14401 255 mm
G2D238

FogLampFrontLeftSupply
CLF29
C2AM02-C
CLF29A BN 2TAD 0.75
14401 1345 mm
5F1T-14489-AA
C12-X2
C12-X1
CLF29E BN 2TAD 0.75
14B242 2975 mm
JU5T-14489-ACA
C11-N2
C11-N1
CLF29G BN 2TAD 0.75
13N052_LHS 795 mm
C1LF08
BEAM FOG LAMP
A_GD120L
CLF29
LF08
ASSEMBLY - HEADLAMP LHS
C1LF08
A_GD120L BK/GN 2TAD 0.75
13N052_LHS 325 mm
S1D120-C
A_GD120F BK/GN 2TAD 0.75
13N052_LHS 470 mm
C11-N1
C11-N2
C11-M1
C11-M2
4W1T-14A624-AB
C11-N2 BK/GN 2TAD 0.75
13N052_RHS 710 mm
S1D120-A
A_GD120D BK/GN 2TBD 4.0
14B242 665 mm
A_G1D120
A_GD120A BK/GN 2TBD 4.0
14B242 665 mm

FogLampFrontRightSupply
VLF90
C2AM02-B
VLF90A BU/GN 2TAD 0.75
14401 1345 mm
JU5T-14A459-MA
C12-U2
C12-U1
VLF90B BU/GN 2TAD 0.75
13B712 950 mm
C11-M2
C11-M1
VLF90C BU/GN 2TAD 0.75
13N052_RHS 745 mm
4W1T-14A624-AB
C1LF09
BEAM FOG LAMP
#2692
VLF90
LF09
ASSEMBLY - HEADLAMP RHS
C1LF09
GD216R BK/VT 2TAD 0.75
13N052_RHS 340 mm
S1D216-B
GD216K BK/VT 2TAD 0.75
13N052_RHS 405 mm
C11-M1
C11-M2 BK/VT 2TAD 0.75
GD216L BK/VT 2TAD 0.75
13B712 350 mm
S1D216-A
G2D216
8V5T-14463-AHA
GD216C BK/VT 2TBD 2.5
14401 410 mm
S2D216-C
GD216A BK/VT 2TBD 2.5
14401 620 mm
C12-W2
C12-W1
GD216B BK/VT 2TBD 2.5
13B712 620 mm

RearFogLampsSupply
CLS37
AM02
MODULE - BODY CONTROL (BCM)
C2AM02-B
CLS37A BU 2TAD 1.5
14401 1040 mm
4S7T-14489-VMA
S2LS37
CLS37B BU 2TAD 0.75
14401 330 mm
C12-E2
C12-E1
CLS37D BU 2TAD 0.75 6495 mm 14398 DWAB2 & SE_B6
C14-A1
C14-A2
DWAB2 MULTIPLEXED
CLS37E BU 3TAP 0.75 1665 mm 14405 DWAB2 & SE_B6
CLS37E1 BU 0.75 1905 mm DWAB9 & SE_B6
CLS37E2 BU 0.75 1715 mm DWABN & SE_B6
CLS37E3 BU 0.75 1725 mm DWABN & SE_C4
C1LS36
C1LS36-2
WSPAK
GD406C1 BK/YE 2TAD 1.5 1505 mm 14405 DWAB9 & SE_B6
GD406C2 BK/YE 1.5 DWABN & SE_B6
GD406C3 BK/YE 1.5 DWABN & SE_C4
GD406C BK/YE 1.5 DWAB2 & SE_B6
CLS37C BU 2TAD 0.75
14401 330 mm
CLS37H GN/WH 2TAD 1.5
14401 370 mm
C12-E2
C12-E1
CLS37F BU 2TAD 0.75 6495 mm 14398 DWAB2 & SE_B6
DWAB2 MULTIPLEXED
CLS37G BU 3TAP 0.75 2495 mm 14405 DWAB2 & SE_B6
CLS37G1 BU 0.75 2735 mm DWAB9 & SE_B6
CLS37G2 BU 0.75 2545 mm DWABN & SE_B6
CLS37G3 BU 0.75 2555 mm DWABN & SE_C4
GD406B1 BK/YE 2TAD 1.5 1855 mm 14405 DWAB9 & SE_B6
GD406B2 BK/YE 1.5 DWABN & SE_B6
GD406B3 BK/YE 1.5 DWABN & SE_C4
GD406B BK/YE 1.5 DWAB2 & SE_B6
S1D406
DWAB9 & SE_B6
DWABN & SE_B6
DWABN & SE_C4
DWAB2 & SE_B6
865 mm 14405
830 mm
840 mm
780 mm
4.0
4.0
4.0
4.0
2TBD
BK/YE
BK/YE
BK/YE
BK/YE
GD406A1
GD406A2
GD406A3
GD406A
G1D406

C4LS36
CLS37L BU 2TAD 0.75
12663 1340 mm WSPAK
GD406E BK/YE 2TAD 1.5
12663 660 mm WSPAK
S4D406
FOG
CLS37
KL31
GD406
LS36
LAMP - TAIL RHS
GD406D BK/YE 2TAD 1.5
12663 680 mm WSPAK

FOG
CLS37
KL31
GD406
LS35
LAMP - TAIL LHS

HRN-14F502
REAR FOG LAMP
CLS37
HRN-14F502
C1AT23-B
CLS37K BU 3TAP 1.5
14F502 840 mm
C11-Z2
C11-Z1
TBD-026-F
TBD-026-M
CLS37J BU 2TAD 1.5
14398 3940 mm
C12-A1
C12-A2
CONNECTOR - TRAILER 15-PIN

REFERENCE			
PART MUST COMPLY WITH RESTRICTED SUBSTANCE MANAGEMENT STANDARD WSS-M99P9999 A1 TO SAFEGUARD HEALTH SAFETY AND THE ENVIRONMENT			
DRAFTED IN ACCORDANCE WITH FORD MOTOR COMPANY ENGINEERING CAD AND DRAFTING STANDARDS VERSION 27.0		3RD ANGLE PROJ DIMENSIONS ARE IN MILLIMETERS	
CAD TYPE X-E3	CAD LOC. TCE	CAD FILE PHJC46-70C160-A2	DTM IS MASTER
OPER NO. N/A	UNIT N/A	DRAWING	SIZE A1
DESIGN sakay	DETAIL -----	TITLE: H625 - 2019 LP3 Design FOG LIGHTING	SHT 1 OF 1
CHECKED -----	SAFETY MFG USE		
SCALE NTS	DATE 20120101	DIVISION: EESE	
		PLANT: N/A	

Modified By: NYAYLA1
Date Changed: 12/5/2019

H625 2019 LP3 Design
C11.01 TURN AND HAZARD LIGHTING

LTRS	REVISIONS		
ORIGINATOR	CHECKER	ENGR APP	MATL APP

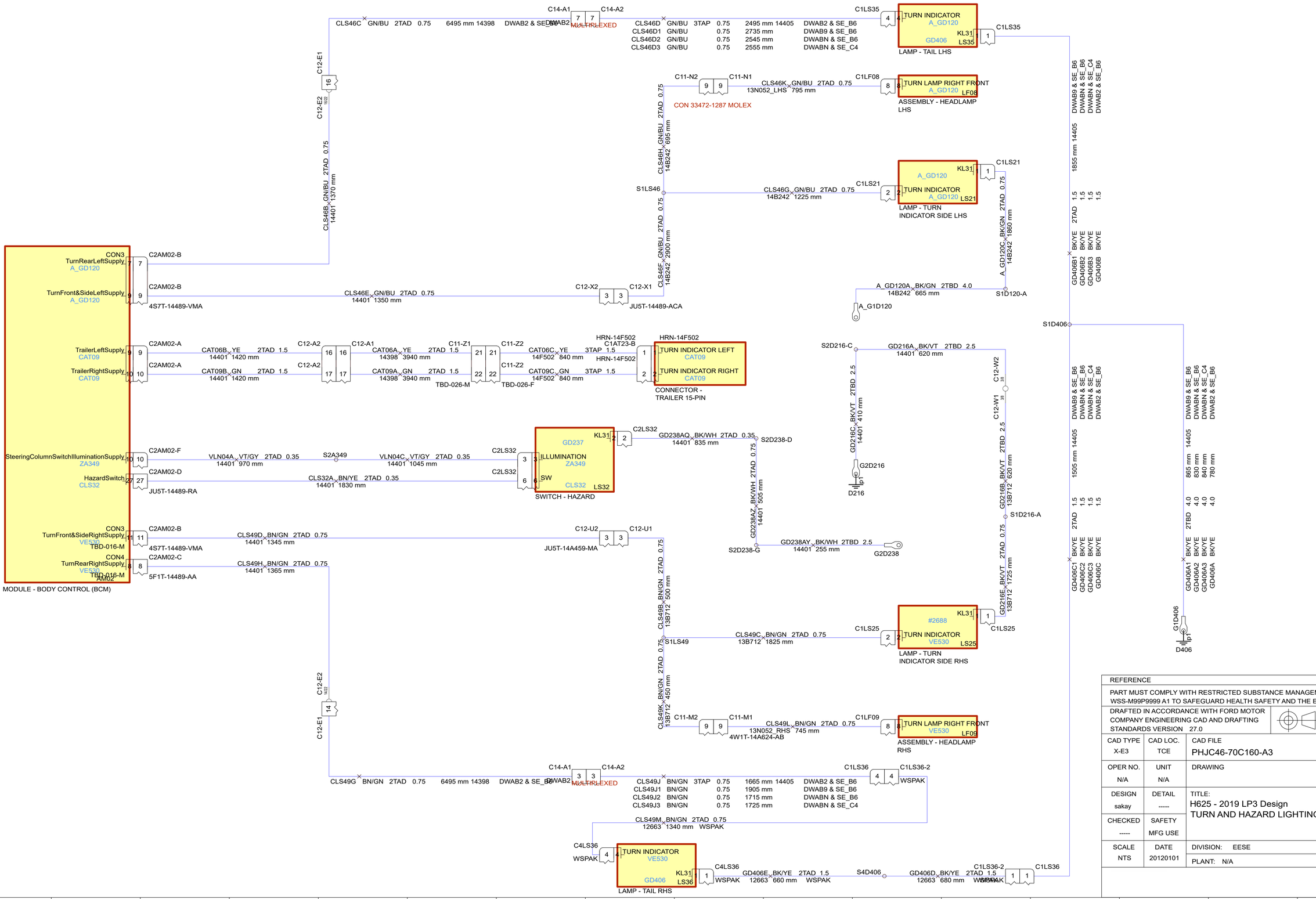

REFERENCE

PART MUST COMPLY WITH RESTRICTED SUBSTANCE MANAGEMENT STANDARD WSS-M99P9999 A1 TO SAFEGUARD HEALTH SAFETY AND THE ENVIRONMENT

DRAFTED IN ACCORDANCE WITH FORD MOTOR COMPANY ENGINEERING CAD AND DRAFTING STANDARDS VERSION 27.0

3RD ANGLE PROJ
DIMENSIONS ARE IN MILLIMETERS

CAD TYPE	CAD LOC.	CAD FILE	DTM
X-E3	TCE	PHJC46-70C160-A3	IS MASTER

OPER NO.	UNIT	DRAWING	SIZE
N/A	N/A		A1

DESIGN	DETAIL	TITLE:	SHT 1 OF 1
sakay	-----	H625 - 2019 LP3 Design TURN AND HAZARD LIGHTING	

CHECKED	SAFETY	
-----	MFG USE	

SCALE	DATE	DIVISION: EESE
NTS	20120101	PLANT: N/A

Modified By: NYAYLA1
Date Changed: 12/24/2019

LTRS	REVISIONS		
ORIGINATOR	CHECKER	ENGR APP	MATL APP

H625 2019 LP3 Design
C11.03 - BRAKE LIGHTING

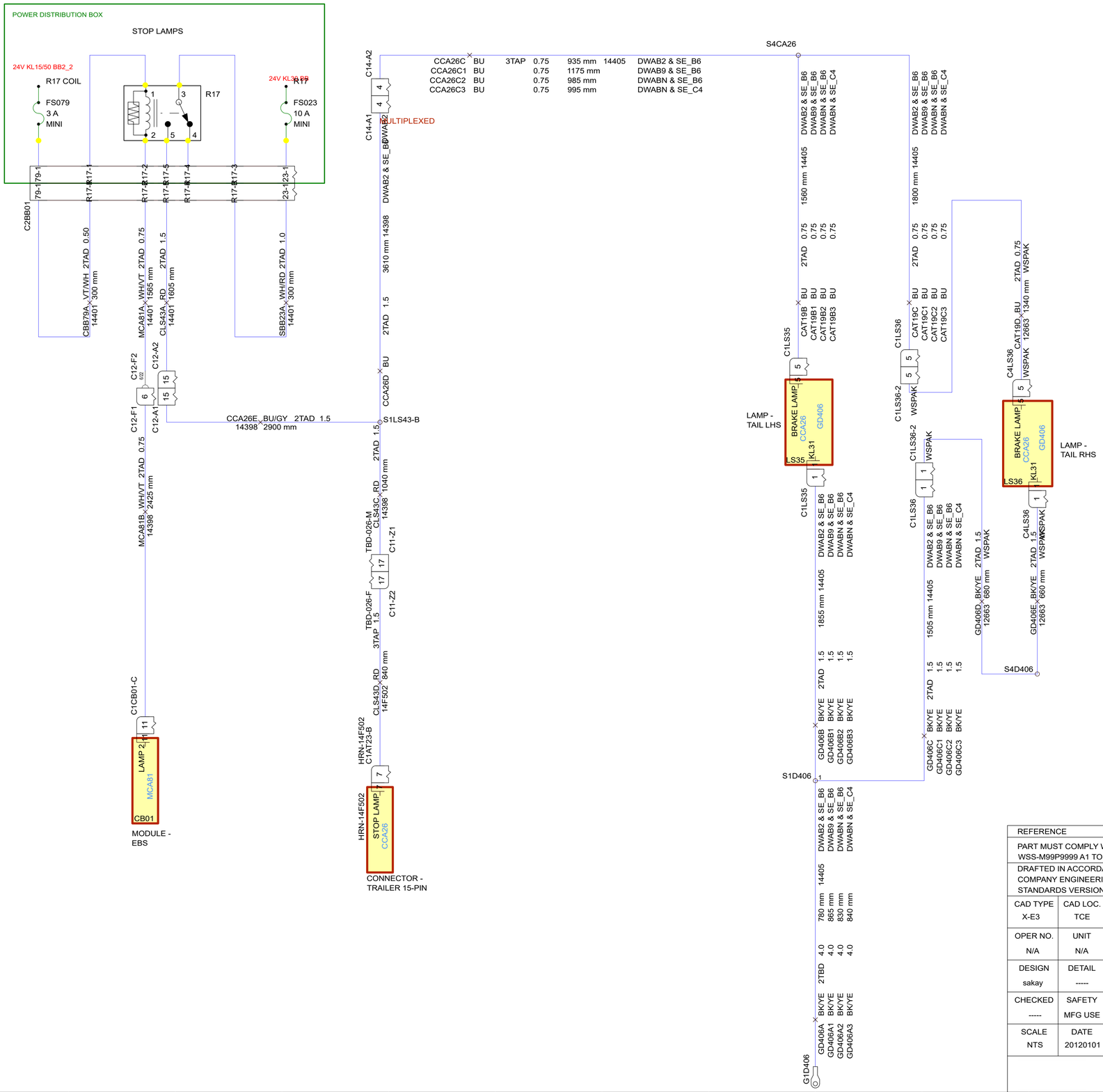

REFERENCE			
PART MUST COMPLY WITH RESTRICTED SUBSTANCE MANAGEMENT STANDARD WSS-M99P9999 A1 TO SAFEGUARD HEALTH SAFETY AND THE ENVIRONMENT			
DRAFTED IN ACCORDANCE WITH FORD MOTOR COMPANY ENGINEERING CAD AND DRAFTING STANDARDS VERSION 27.0		3RD ANGLE PROJ DIMENSIONS ARE IN MILLIMETERS	
CAD TYPE X-E3	CAD LOC. TCE	CAD FILE PHJC46-70C162-A	DTM IS MASTER
OPER NO. N/A	UNIT N/A	DRAWING	SIZE A1
DESIGN sakay	DETAIL -----	TITLE: H625 - 2019 LP3 Design BRAKE LIGHTING	SHT 1 OF 1
CHECKED -----	SAFETY MFG USE		
SCALE NTS	DATE 20120101	DIVISION: EESE	
		PLANT: N/A	

Modified By: NVAYLA1
Date Changed: 12/3/2019

LTRS	REVISIONS		
ORIGINATOR	CHECKER	ENGR APP	MATL APP

H625 2019 LP3 Design
C11.04 - BACKUP LIGHTING

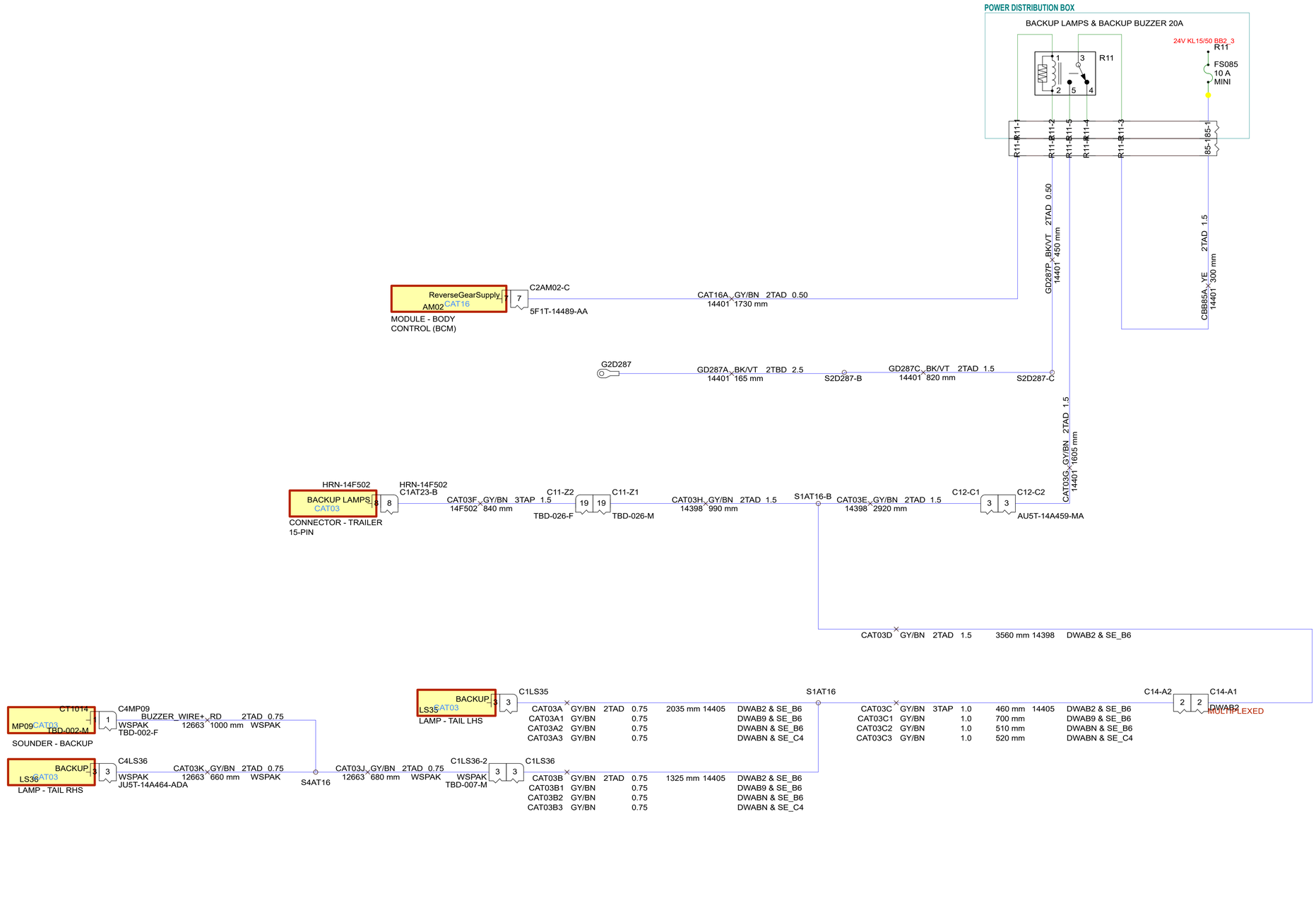

REFERENCE		
PART MUST COMPLY WITH RESTRICTED SUBSTANCE MANAGEMENT STANDARD WSS-M99P9999 A1 TO SAFEGUARD HEALTH SAFETY AND THE ENVIRONMENT		
DRAFTED IN ACCORDANCE WITH FORD MOTOR COMPANY ENGINEERING CAD AND DRAFTING STANDARDS VERSION 27.0		3RD ANGLE PROJ DIMENSIONS ARE IN MILLIMETERS
CAD TYPE X-E3	CAD LOC.	CAD FILE PHJC46-70C163-A DTM IS MASTER
OPER NO. N/A	UNIT N/A	DRAWING SIZE A1
DESIGN agezer1	DETAIL -----	TITLE: H625 - 2019 LP3 Design BACKUP LIGHTING SHT 1 OF 1
CHECKED -----	SAFETY MFG USE	
SCALE N/A	DATE 0	DIVISION: EESE PLANT: N/A

Modified By: AVAYLA1
Date Changed: 12/5/2019

H625 2019 LP3 Design
C11.05 - PARK - STAND LIGHTING

LTRS	REVISIONS		
ORIGINATOR	CHECKER	ENGR APP	MATL APP

POWER DISTRIBUTION BOX
PARK LAMPS 20A
24V KL30 BB
R19
FS016 15 A MINI
R19
FS060 5 A MINI
FS059 10 A MINI
TRAILER 15-PIN & AFTERMARKET (CABIN & CHASSIS) PARK LIGHTS

16-216-2 | R19-1 | R19-2 | R19-5 | R19-4 | R19-3 | 60-260-2 | 60-160-1 | 59-159-1 | 59-259-2

SBB16A VT/RD 2TBD 2.5 14401 300 mm
LMP07A BN 2TAD 0.35 14401 1745 mm
LMP07AA BU/WH 2TBD 2.5 14401 150 mm
LMP07AE BU/WH 2TAD 1.5 14401 150 mm
CBB60A YE/VT 2TAD 0.50 14401 1385 mm
CBB59A BN/WH 2TAD 0.75 14401 885 mm
LMP07AB BU/WH 2TAD 1.5 14401 150 mm

S2BB59
CBB59C BN/WH 2TAD 0.75 14401 615 mm
C2AH02 1 — PARK LAMP CBB59 AH02 — CONNECTOR - AFTERMARKET CABIN

CBB59B BN/WH 2TAD 0.75 14401 720 mm
C12-D2 12 12 AU5T-14A459-NA
C12-D1
CBB59D BK 2TAD 0.75 14398 2790 mm
S1BB59-A

LMP07J BU/WH 2TAD 0.75 14401 200 mm
S2LF61-C
LMP07Z BU/WH 2TAD 0.75 14401 1150 mm
C2AM02-B 13 13 4S7T-14489-VMA
FrontParkingLightSupply LMP07 — RearParkingLightSupply CLF61
AM02
C2AM02-A 14 14
MODULE - BODY CONTROL (BCM)
LMP07L BU/WH 2TAD 0.75 14401 325 mm
JU5T-14A441-A

S2LM07
GD287U BK/VT 2TAD 0.50 14401 375 mm

G2D287
GD287A BK/VT 2TBD 2.5 14401 165 mm
S2D287-B
GD287D BK/VT 2TAD 1.5 14401 895 mm
S2D287-D

C12-X2 2 2
C12-X1
JU5T-14489-ACA
C12-U2 2 2
C12-U1
JU5T-14A441-A

LMP07P BU/WH 2TAD 0.75 14B242 2975 mm
C11-N2 1 1 C11-N1
LMP07Q BU/WH 2TAD 0.75 13N052_LHS 795 mm
C1LF08 1 LF08 POSITION LIGHT RIGHT LMP07 ASSEMBLY - HEADLAMP LHS

LMP07M BU/WH 2TAD 0.75 13B712 950 mm
C11-M2 1 1 C11-M1
LMP07N BU/WH 2TAD 0.75 13N052_RHS 745 mm
4W1T-14A624-AB
C1LF09 1 LF09 POSITION LIGHT RIGHT LMP07 ASSEMBLY - HEADLAMP RHS

CBB60C YE/VT 2TAD 0.35 15A404 1390 mm
C22-A1 5 5 C22-A2
CBB60B YE/VT 2TAD 0.35 14401 850 mm
9U5T-14489-AC
S2BB60
CBB60F YE/VT 2TAD 0.35 14401 180 mm
C12-E2 12/22 12 C12-E1

CBB60G YE/VT 2TAD 0.75 3240 mm 14398 DWAB2 & SE_B6
CBB60G1 YE/VT 0.75 DWAB9 & SE_B6
CBB60G2 YE/VT 0.75 DWABN & SE_B6
CBB60G3 YE/VT 0.75 DWABN & SE_C4
S1BB60

S9BB60
CBB60D YE/VT 2TAD 0.35 15A404 785 mm
C9A101 2 2 KL31 A101 — LAMP - DUAL ROOF MARKER RHS
CBB60E YE/VT 2TAD 0.35 15A404 2090 mm
C9A103 1 PWR A103 — LAMP - DUAL ROOF MARKER LHS

LAMP - SIDE MARKER REAR LHS
CBB60 PWR LS15 2 2 C4LS15
CBB60N YE/VT 2TAD 0.75 4075 mm 14398

LAMP - SIDE MARKER REAR RHS
CBB60 PWR LS16 2 2 C4LS16
CBB60P YE/VT 2TAD 0.75 3650 mm 14398

LAMP - SIDE MARKER MIDDLE LHS
CBB60 PWR LS12 2 2 C1LS12
CBB60S YE/VT 2TAD 0.75 14D146 1105 mm
C11-C2 3 3 C11-C1
CBB60R YE/VT 2TAD 0.75 14398 3620 mm

LAMP - SIDE MARKER MIDDLE RHS
CBB60 PWR LS17 2 2 C1LS17
CBB60T YE/VT 2TAD 0.75 14398 1790 mm

DWAB2 & SE_B6 3255 mm 14398 2TAD 0.75 YE/VT CBB60H

CBB59J BK 2TAD 1.5 14398 1090 mm
CBB59K BN 2TAD 1.5 14398 1090 mm
C11-Z1 23 5 TBD-026-M
C11-Z2 23 5 TBD-026-F
C11-Z2 3TAP 1.5 CBB59F BK 14F502 840 mm
C11-Z2 3TAP 1.5 CBB59G BN 14F502 840 mm
HRN-14F502 C1AT23-B
HRN-14F502 5 6
HRN-14F502 REAR LAMP LEFT CBB59 — REAR LAMP RIGHT CBB59 — CONNECTOR - TRAILER 15-PIN

CBB59E BN 2TAD 1.5 14398 1535 mm
C1AH03 1 PWR CBB59 AH03 — CONNECTOR - AFTERMARKET CHASSIS

D406 G1D406
GD406A1 BK/YE 2TBD 4.0 865 mm 14405 DWAB9 & SE_B6
GD406A2 BK/YE 4.0 830 mm DWABN & SE_B6
GD406A3 BK/YE 4.0 840 mm DWABN & SE_C4
GD406A BK/YE 4.0 780 mm DWAB2 & SE_B6
S1D406

S4D406
GD406D BK/YE 2TAD 1.5 12663 680 mm WSPAK
GD406E BK/YE 2TAD 1.5 12663 660 mm WSPAK
C4LS36 1 PARK POSITION LS36 2 2 C4LS36 — LAMP - TAIL RHS
WSPAK

C1LS35 1 PARK POSITION LS35 2 2 C1LS35 — LAMP - TAIL LHS

GD406B1 BK/YE 2TAD 1.5 1855 mm 14405 DWAB9 & SE_B6
GD406B2 BK/YE 1.5 DWABN & SE_B6
GD406B3 BK/YE 1.5 DWABN & SE_C4
GD406B BK/YE 1.5 DWAB2 & SE_B6

GD406C1 BK/YE 2TAD 1.5 1505 mm 14405 DWAB9 & SE_B6
GD406C2 BK/YE 1.5 DWABN & SE_B6
GD406C3 BK/YE 1.5 DWABN & SE_C4
GD406C BK/YE 1.5 DWAB2 & SE_B6
C1LS36 1 1 C1LS36-2 WSPAK

C1LS36-2 2 2 C1LS36 WSPAK
CBB60L YE/VT 2TAD 0.75 1910 mm 14405 DWAB2 & SE_B6
CBB60L1 YE/VT 0.75 DWAB9 & SE_B6
CBB60L2 YE/VT 0.75 DWABN & SE_B6
CBB60L3 YE/VT 0.75 DWABN & SE_C4

CBB60K YE/VT 2TAD 0.75 1450 mm 14405 DWAB2 & SE_B6
CBB60K1 YE/VT 0.75 DWAB9 & SE_B6
CBB60K2 YE/VT 0.75 DWABN & SE_B6
CBB60K3 YE/VT 0.75 DWABN & SE_C4

S4BB60
CBB60J YE/VT 3TAP 0.75 1045 mm 14405 DWAB2 & SE_B6
CBB60J1 YE/VT 0.75 1285 mm DWAB9 & SE_B6
CBB60J2 YE/VT 0.75 1095 mm DWABN & SE_B6
CBB60J3 YE/VT 0.75 1105 mm DWABN & SE_C4
C14-A2 8 8 C14-A1 DWAB2 — MULTIPLEXED

REFERENCE			
PART MUST COMPLY WITH RESTRICTED SUBSTANCE MANAGEMENT STANDARD WSS-M99P9999 A1 TO SAFEGUARD HEALTH SAFETY AND THE ENVIRONMENT			
DRAFTED IN ACCORDANCE WITH FORD MOTOR COMPANY ENGINEERING CAD AND DRAFTING STANDARDS VERSION 27.0		3RD ANGLE PROJ DIMENSIONS ARE IN MILLIMETERS	
CAD TYPE X-E3	CAD LOC.	CAD FILE PHJC46-70C164-A	DTM IS MASTER
OPER NO. N/A	UNIT N/A	DRAWING	SIZE A1
DESIGN sakay	DETAIL -----	TITLE: H625 - 2019 LP3 Design PARK - STAND LIGHTING	SHT 1 OF 1
CHECKED -----	SAFETY MFG USE		
SCALE N/A	DATE 20160817	DIVISION: EESE	
		PLANT: N/A	

Modified By: IVYATLAS
Date Changed: 12/5/2019

H625 2019 LP3 Design
C11.06 - HEADLAMP LEVELING

LTRS	REVISIONS		
ORIGINATOR	CHECKER	ENGR APP	MATL APP

POWER DISTRIBUTION BOX

HEADLAMP SW.
FS100
3 A
MINI

RAIN SENSOR & INCAR TEMP. / HUMIDITY SENSOR & HEADLAMP ASSEMBLIES LHS & RHS
FS093
7.5 A
MINI

100-1 100-2 93-1 93-2

C2BB01

B_CDC77G_GY/YE_2TAD_4.0
14401 260 mm

S2DC77-B

B_CDC77D_GY/YE_2TBD_2.5
14401 895 mm

CDC78B_VT_2TBD_4.0
14401 1155 mm

C22-A2 21 21 C22-A1
35 35
9U5T-14489-AC

CDC78A_VT/BN_2TBD_2.5
15A404 2545 mm

B_CDC77C_GY/YE_2TBD_2.5
15A404 2345 mm

S9DC77-B

B_CDC77A_GY/YE_2TBD_2.5
15A404 200 mm

B_CDC77B_GY/YE_2TBD_2.5
15A404 200 mm

B_CDC77K_GY/YE_2TBD_2.5
15A404 200 mm

B_CDC77L_GY/YE_2TBD_2.5
15A404 200 mm

C9DC31
1 7 11 8 10 12
CT923
12V KL15 OUTPUT CDC78
12V KL30 OUTPUT CDC77
12V KL30 OUTPUT CDC77
12V KL30 OUTPUT CDC77
12V KL30 OUTPUT CDC77
DC31
VOLTAGE CONVERTER - 2

CBB93C_GY/BN_2TAD_0.50
14401 325 mm

CBB93A_GY/BN_2TAD_0.50
14401 1215 mm

S2BB93

CBB93B_GY/BN_2TAD_0.50
14401 330 mm

RLF26C_GY/YE_2TAD_0.35
14401 2395 mm

AM02
LIN_IPSwitch
VDN01
7
MODULE - BODY CONTROL (BCM)

C2AM02-F

VDN01A_BU/WH_2TAD_0.50
14401 825 mm

S2DN01

VDN01G_BU/WH_2TAD_0.50
14401 1765 mm

SBBA0A_GN/RD_2TAD_0.35
14401 3180 mm

C2LF23
1 3
12V KL30
LIN
SBBA0GD120
VDN01GD237
LEVELING
KL31
6 7
SWITCH - HEADLAMP

C2LF23

RLF26A_GY/YE_2TAD_0.35
14401 395 mm

S2LF26

RLF26B_GY/YE_2TAD_0.35
14401 2400 mm

GD238AP_BK/WH_2TAD_0.75
14401 1410 mm

S2D238-D

GD238AZ_BK/WH_2TAD_0.75
14401 505 mm

S2D238-G

GD238AY_BK/WH_2TBD_2.5
14401 255 mm

G2D238

C12-X2 13 20
C12-X1 13 20
C11-N2 7 7
9U5T-14489-ACA

RLF26D_GY/YE_2TAD_0.75
14B242 2975 mm

CBB93D_GY/BN_2TAD_0.75
14B242 2975 mm

A_GD120F_BK/GN_2TAD_0.75
13N052_LHS 470 mm

S1D120-A

A_GD120D_BK/GN_2TAD_0.75
14B242 710 mm

A_GD120A_BK/GN_2TBD_4.0
14B242 665 mm

S1D120-C

A_G1D120

C11-N1 5 8

RLF26F_GY/YE_2TAD_0.75
13N052_LHS 795 mm

CBB93F_GY/BN_2TAD_0.75
13N052_LHS 795 mm

A_GD120H_BK/GN_2TAD_0.75
13N052_LHS 325 mm

C1LF08
10 12 11
CT722
MOTOR HEADLAMP LEVELING A_GD120
MOTOR #2737
GND A_GD120
LF08
ASSEMBLY - HEADLAMP LHS

C12-U2 9 9
C12-V2 20 20
J15T-14A459-MA

C12-U1 9 9
C12-V1 20 20
C11-M2 7 7
4W1T-14A624-AB
C11-M1 7 7

RLF26E_GY/YE_2TAD_0.75
13B712 950 mm

CBB93E_GY/BN_2TAD_0.75
13B712 930 mm

GD216K_BK/VT_2TAD_0.75
13N052_RHS 405 mm

S1D216-B

GD216L_BK/VT_2TAD_0.75
13B712 350 mm

S1D216-A

GD216B_BK/VT_2TBD_2.5
13B712 620 mm

C12-W1 38
C12-W2 38

GD216A_BK/VT_2TBD_2.5
14401 620 mm

S2D216-C

GD216C_BK/VT_2TBD_2.5
14401 410 mm

G2D216

C11-M2 5 8
C11-M1 5 8

RLF26G_GY/YE_2TAD_0.75
13N052_RHS 745 mm

CBB93G_GY/BN_2TAD_0.75
13N052_RHS 745 mm

GD216N_BK/VT_2TAD_0.75
13N052_RHS 340 mm

C1LF09
10 12 11
MOTOR HEADLAMP LEVELING A_GD120
MOTOR #2737
GND #2688
LF09
ASSEMBLY - HEADLAMP RHS

REFERENCE

PART MUST COMPLY WITH RESTRICTED SUBSTANCE MANAGEMENT STANDARD WSS-M99P9999 A1 TO SAFEGUARD HEALTH SAFETY AND THE ENVIRONMENT

DRAFTED IN ACCORDANCE WITH FORD MOTOR COMPANY ENGINEERING CAD AND DRAFTING STANDARDS VERSION 27.0

3RD ANGLE PROJ
DIMENSIONS ARE IN MILLIMETERS

CAD TYPE	CAD LOC.	CAD FILE	DTM
X-E3		PHJC46-70C165-A	IS MASTER
OPER NO.	UNIT	DRAWING	SIZE
N/A	N/A		A1
DESIGN	DETAIL	TITLE: H625 - 2019 LP3 Design HEADLAMP LEVELING	SHT 1 OF 1
sakay	-----		
CHECKED	SAFETY		
--------	MFG USE		
SCALE	DATE	DIVISION: EESE	
N/A	20170117	PLANT: N/A	

Modified By: ABEKES
Date Changed: 11/28/2019

H625 2019 LP3 Design
C11.07 - ROOF BEACON LIGHTING

LTRS	REVISIONS		
ORIGINATOR	CHECKER	ENGR APP	MATL APP

POWER DISTRIBUTION BOX
SWITCHES & BRAKE LOCKING VALVE
FS084 5 A MINI
TRIPLE ROOF MARKER LAMPS 20A
R21
24V KL30 BB
R21 & R23
FS029 15 A MINI
BEACON LAMP 20A
R23
JU5T-14D089-BA
84-1 84-2 R21-1 R21-2 R21-5 R21-4 R21-3 29-1 R23-1 R23-2 R23-5 R23-4 R23-3
C2BB01 2TAD 0.75 CBB84A VT 14401 1200 mm
24V KL15/50 BB2_1
CAE01A WH/GN 2TAD 0.50 14401 1155 mm
GD287W BK/VT 2TAD 0.50 14401 375 mm
CAT11A BN 2TAD 0.75 14401 1155 mm
SBB29B GY/RD 2TAD 0.75 14401 150 mm
SBB29A GY/RD 2TAD 1.0 14401 300 mm
CAA11A GN/BU 2TAD 0.50 14401 1155 mm
GD287AZ BK/VT 2TAD 0.50 14401 375 mm
CLN84B VT/OG 2TAD 1.5 14401 915 mm
SBB29C GY/RD 2TAD 1.0 14401 150 mm
JU5T-14D089-BA

INPUT 1 CBB84
OUTPUT 1 CAE01
DIMMING CBB60
GND A320
A_GD214
SWITCH - TRIPLE ROOF MARKER LAMPS

C9A320 CBB84H VT 15B594 160 mm 2TAD 0.35
S9BB84-C
CBB84J VT 15B594 960 mm 2TAD 0.35
C99-A2 16 16
C99-A1 CBB84G VT 15A404 2635 mm 2TAD 0.35
C22-A1 41 41
C22-A2 CBB84C VT 14401 665 mm 2TAD 0.35
9U5T-14489-AC
S2BB84-A

C99-A2 32 32
C99-A1 CAE01B WH/GN 15A404 2635 mm 2TAD 0.50 JBPAH
C22-A1 56 56
C22-A2 9U5T-14489-AC
S2D287-D

C22-A2 11 11
C22-A1 CAA11B GN/BU 15A404 2635 mm 2TAD 0.50 J3BAE
C99-A1 18 18
C99-A2 CAA11C GN/BU 15B594 1090 mm 2TAD 0.35
C9A320A JU5T-14489-ASA
9U5T-14489-AC
S2BB29

CT1009 OUTPUT 1 TBD-008-M A320A
SWITCH - BEACON LAMP

CLN04AY BU/BN 15B594 450 mm 2TAD 0.35
S9LN04-A
A_GD214AV BK/BU 15B594 270 mm 2TAD 0.35
S9D214-E

CLN84C VT/OG 14401 380 mm 2TAD 1.5
S2LN84
C22-A2 33 33 C22-A1
9U5T-14489-AC 9U5T-14A459-BC
CLN84A VT/OG 15A404 4465 mm 2TAD 1.5 J3BAE
G9D303
GD303A BK/YE 15A404 705 mm 2TBD 4.0
S9D303-B
GD303P BK/YE 15A404 2040 mm 2TAD 1.5 J3BAE
J3BAE 1 2 PWR CLN84 KL31 A335 GD303
LAMP - ROOF BEACON

GD287D BK/VT 14401 895 mm 2TAD 1.5
C22-A2 20 20 C22-A1
9U5T-14489-AC
S2D287-B
2TAD 1.5 CAT11B BN 15A404 3790 mm JBPAH
GD287A BK/VT 14401 165 mm 2TBD 2.5
G2D287

CLN84D VT/OG 14401 705 mm 2TAD 1.5
C12-Y2 5 5 C12-Y1
JU5T-14A459-SA JU5T-14489-AEA
CLN84E VT/OG 14B242 4695 mm 2TAD 1.5 J3BAE
C14-B1 1 1
JU5T-14A624-NA
CT1031 JUMPER HARNESS
CT1030 A429 CLN84 TBD-002-M 1
TBD-002-F
ROOF BEACON LAMP - 2

CAT11D BN 15A404 170 mm 2TAD 0.75 JBPAH
C9LS28 1 PWR LS28 KL31 3 JBPAH
LAMP - TRIPLE ROOF MARKER LHS
C9LS28 GD216U BK/VT 15A404 1160 mm 2TAD 0.75 JBPAH

S9AA11
CAT11E BN 15A404 310 mm 2TAD 0.75 JBPAH
C9LS52 1 PWR LS52 KL31 3 JBPAH
LAMP - TRIPLE ROOF MARKER CENTER
C9LS52 GD216Y BK/VT 15A404 1420 mm 2TAD 0.75 JBPAH
S9D216-D
GD216H BK/VT 15A404 2680 mm 2TAD 0.75
C22-A1 16 16 C22-A2
9U5T-14489-AC

CAT11F BN 15A404 620 mm 2TAD 0.75 JBPAH
C9LS33 1 PWR LS33 KL31 3 JBPAH
F3LB-14489-MA
LAMP - TRIPLE ROOF MARKER RHS
C9LS33 GD216V BK/VT 15A404 1730 mm 2TAD 0.75 JBPAH
F3LB-14489-MA

G2D216
GD216C BK/VT 14401 410 mm 2TBD 2.5
S2D216-C
GD216F BK/VT 14401 490 mm 2TAD 0.75

CT1009 GND A_GD214 INPUT 1 CBB84 DIMMING CBB60 TBD-008-M A320A
SWITCH - BEACON LAMP
C9A320A A_GD214BZ BK/BU 15B594 240 mm 2TAD 0.35
CBB84K VT 15B594 130 mm 2TAD 0.35
CLN04BZ BU/BN 15B594 420 mm 2TAD 0.35
C9A320A JU5T-14489-ASA

C99-A2 A_GD214AF BK/BU 15B594 850 mm 2TAD 0.75
27 27
C99-A1 A_GD214N BK/BU 15A404 2635 mm 2TAD 0.75
C22-A1 18 18 C22-A2
9U5T-14489-AC
A_GD214E BK/BU 14401 1375 mm 2TAD 0.75
S2D214-A
A_GD214A BK/BU 14401 620 mm 2TBD 4.0
A_G2D214

C99-A2 CLN04AP BU/BN 15B594 670 mm 2TAD 0.35
12 12
C99-A1 CLN04AN BU/BN 15A404 2635 mm 2TAD 0.35
C22-A1 50 50 C22-A2
9U5T-14489-AC
CLN04D BU/BN 14401 1125 mm 2TAD 0.35
S2LN04-A
CLN04A BU/BN 14401 930 mm 2TAD 0.75
C2AM02-C 15 15 InteriorLightDimmingSupply CBB60 AM02
5F1T-14489-AA
MODULE - BODY CONTROL (BCM)

REFERENCE			
PART MUST COMPLY WITH RESTRICTED SUBSTANCE MANAGEMENT STANDARD WSS-M99P9999 A1 TO SAFEGUARD HEALTH SAFETY AND THE ENVIRONMENT			
DRAFTED IN ACCORDANCE WITH FORD MOTOR COMPANY ENGINEERING CAD AND DRAFTING STANDARDS VERSION 27.0		3RD ANGLE PROJ DIMENSIONS ARE IN MILLIMETERS	
CAD TYPE X-E3	CAD LOC. TCE	CAD FILE PHJC46-70C166-A	DTM IS MASTER
OPER NO. N/A	UNIT N/A	DRAWING	SIZE A1
DESIGN sakay	DETAIL -----	TITLE: H625 - 2019 LP3 Design ROOF BEACON LIGHTING & TRIPLE ROOF MARKE	SHT 1 OF 1
CHECKED -----	SAFETY MFG USE		
SCALE NTS	DATE 20120101	DIVISION: EESE	
		PLANT: N/A	

Modified By: NVAYLA1
Date Changed: 12/5/2019

H625 2019 LP3 Design
C12.04 - ADAPTIVE CRUISE CONTROL

LTRS	REVISIONS		
ORIGINATOR	CHECKER	ENGR APP	MATL APP

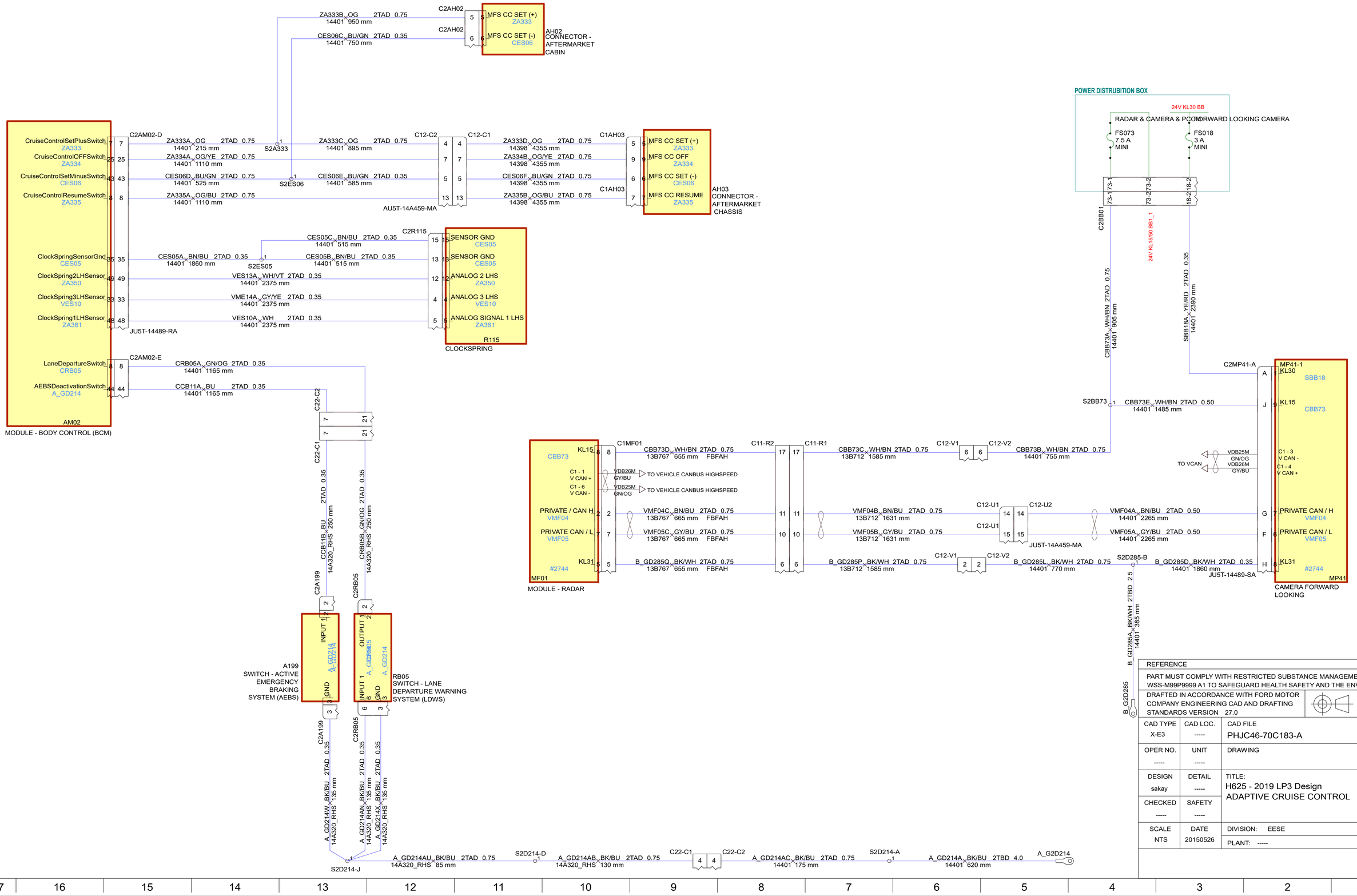

REFERENCE	
PART MUST COMPLY WITH RESTRICTED SUBSTANCE MANAGEMENT STANDARD WSS-M99P9999 A1 TO SAFEGUARD HEALTH SAFETY AND THE ENVIRONMENT	
DRAFTED IN ACCORDANCE WITH FORD MOTOR COMPANY ENGINEERING CAD AND DRAFTING STANDARDS VERSION 27.0	3RD ANGLE PROJ DIMENSIONS ARE IN MILLIMETERS

CAD TYPE	CAD LOC.	CAD FILE	DTM
X-E3	-----	PHJC46-70C183-A	IS MASTER

OPER NO.	UNIT	DRAWING	SIZE
-----	-----		A1

DESIGN	DETAIL	TITLE:	SHT 1 OF 1
sakay	-----	H625 - 2019 LP3 Design ADAPTIVE CRUISE CONTROL	
CHECKED	SAFETY		
-----	-----		
SCALE	DATE	DIVISION: EESE	
NTS	20150526	PLANT: -----	

Modified By: NVAVLA1
Last Changed: 12/5/2019

H625 2019 LP3 Design
C13.03 - POWER LOCKS

LTRS	REVISIONS		
ORIGINATOR	CHECKER	ENGR APP	MATL APP

MODULE - BODY CONTROL (BCM)

SWITCH - DOOR LOCK LHS

UNIT - POWER LATCH LHS

SWITCH - DOOR LOCK RHS

UNIT - POWER LATCH RHS

REFERENCE			
PART MUST COMPLY WITH RESTRICTED SUBSTANCE MANAGEMENT STANDARD WSS-M99P9999 A1 TO SAFEGUARD HEALTH SAFETY AND THE ENVIRONMENT			
DRAFTED IN ACCORDANCE WITH FORD MOTOR COMPANY ENGINEERING CAD AND DRAFTING STANDARDS VERSION 27.0		3RD ANGLE PROJ DIMENSIONS ARE IN MILLIMETERS	
CAD TYPE X-E3	CAD LOC. TCE	CAD FILE PHJC46-70C202-A	DTM IS MASTER
OPER NO. N/A	UNIT N/A	DRAWING	SIZE A1
DESIGN sakay	DETAIL -----	TITLE: H625 - 2019 LP3 Design POWER LOCKS	SHT 1 OF 1
CHECKED -----	SAFETY MFG USE		
SCALE NTS	DATE 20160623	DIVISION: EESE	
		PLANT: N/A	

Modified By: ABEKEL
Date Changed: 11/26/2019

H625 2019 LP3 Design
C15.04 POWER MIRROR WITH HEATED

LTRS	REVISIONS		
ORIGINATOR	CHECKER	ENGR APP	MATL APP

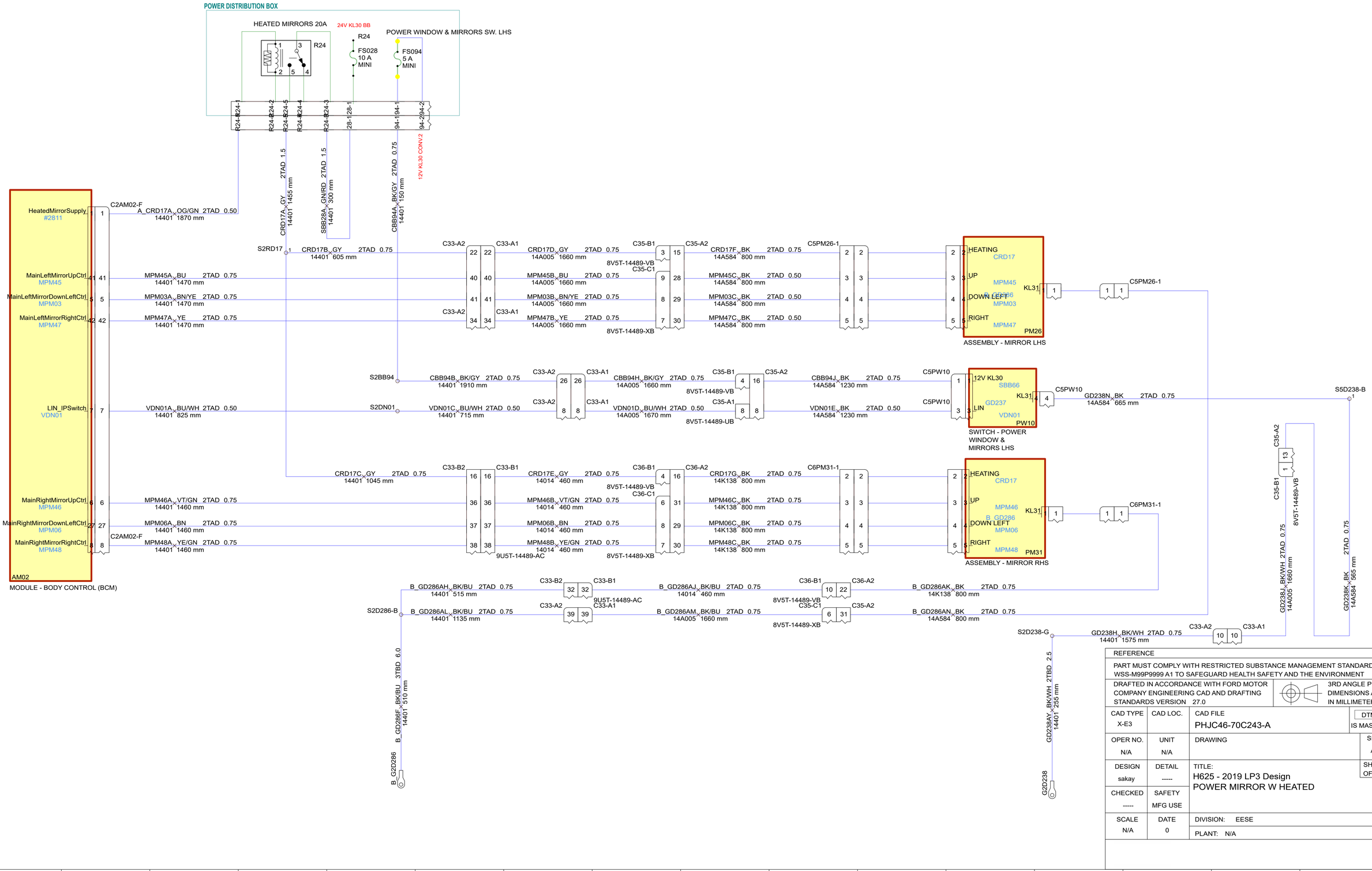

REFERENCE

PART MUST COMPLY WITH RESTRICTED SUBSTANCE MANAGEMENT STANDARD WSS-M99P9999 A1 TO SAFEGUARD HEALTH SAFETY AND THE ENVIRONMENT

DRAFTED IN ACCORDANCE WITH FORD MOTOR COMPANY ENGINEERING CAD AND DRAFTING STANDARDS VERSION 27.0

3RD ANGLE PROJ
DIMENSIONS ARE IN MILLIMETERS

CAD TYPE	CAD LOC.	CAD FILE	DTM
X-E3		PHJC46-70C243-A	IS MASTER

OPER NO.	UNIT	DRAWING	SIZE
N/A	N/A		A1

DESIGN	DETAIL	TITLE:	SHT 1 OF 1
sakay	-----	H625 - 2019 LP3 Design POWER MIRROR W HEATED	

CHECKED	SAFETY
-----	MFG USE

SCALE	DATE
N/A	0

DIVISION: EESE

PLANT: N/A

Modified By: ABEKEL
Date Changed: 11/26/2019

LTRS	REVISIONS		
ORIGINATOR	CHECKER	ENGR APP	MATL APP

H625 2019 LP3 Design
C12.10 - PREDICTIVE CRUISE CONTROL

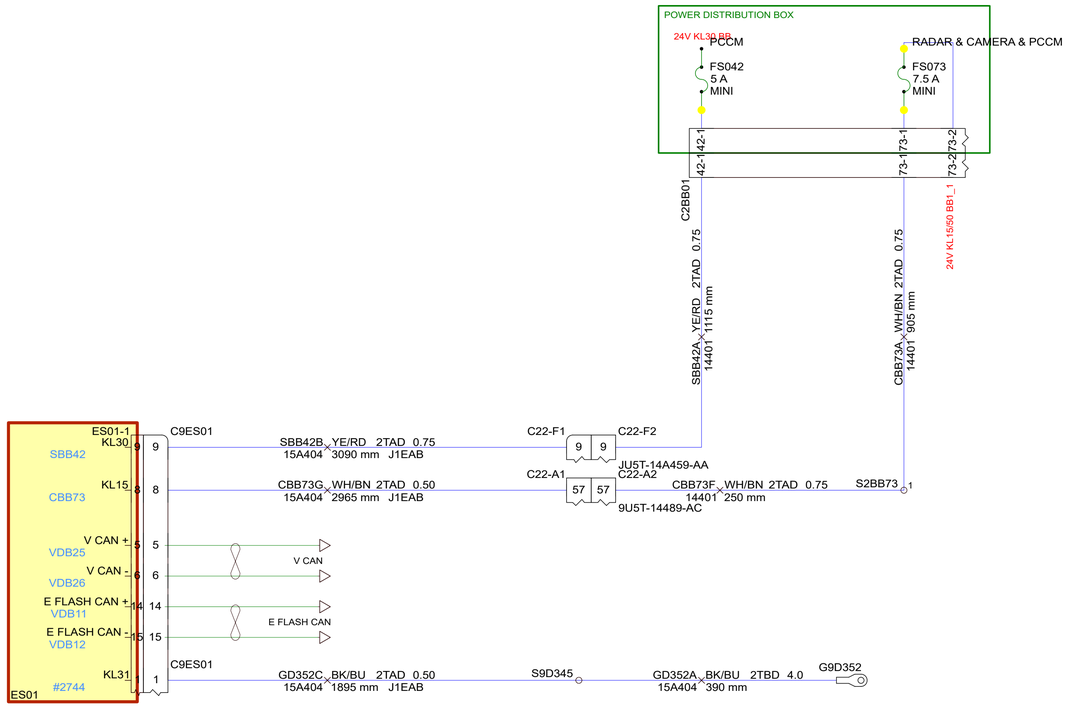

REFERENCE			
PART MUST COMPLY WITH RESTRICTED SUBSTANCE MANAGEMENT STANDARD WSS-M99P9999 A1 TO SAFEGUARD HEALTH SAFETY AND THE ENVIRONMENT			
DRAFTED IN ACCORDANCE WITH FORD MOTOR COMPANY ENGINEERING CAD AND DRAFTING STANDARDS VERSION 27.0		3RD ANGLE PROJ DIMENSIONS ARE IN MILLIMETERS	
CAD TYPE X-E3	CAD LOC. -----	CAD FILE PHJC46-70C189-A	DTM IS MASTER
OPER NO. -----	UNIT -----	DRAWING	SIZE A1
DESIGN fkarade3	DETAIL -----	TITLE: H625 - 2019 LP3 Design PREDICTIVE CRUISE CONTROL (PCCM)	SHT 1 OF 1
CHECKED -----	SAFETY -----		
SCALE NTS	DATE 20160302	DIVISION: EESE	
		PLANT: -----	

Modified By: NYAYLA1
Date Changed: 12/5/2019

LTRS	REVISIONS		
ORIGINATOR	CHECKER	ENGR APP	MATL APP

H625 2019 LP3 Design
C16.12 - HEATED SEAT / SEAT BELT MINDER

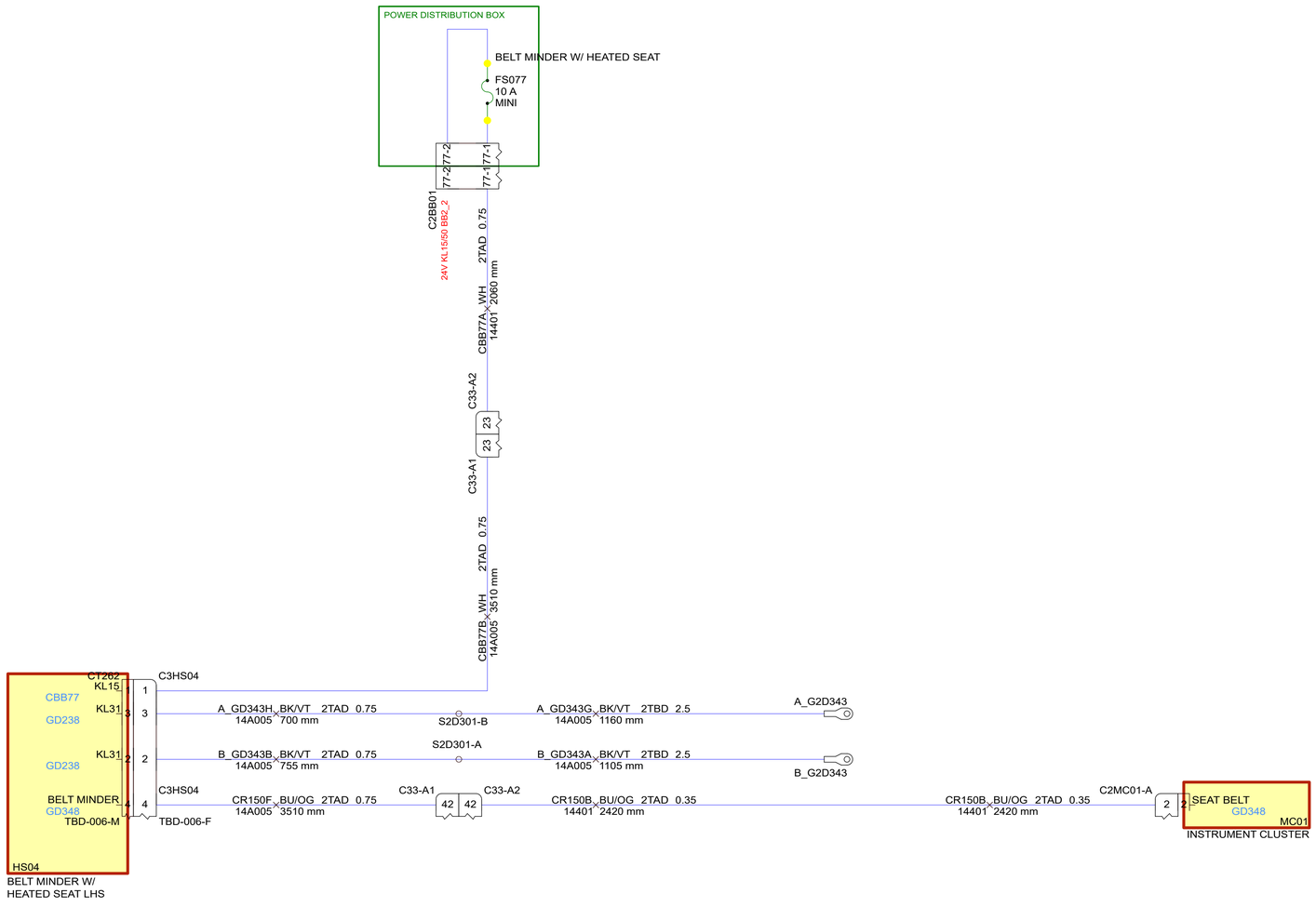

REFERENCE			
PART MUST COMPLY WITH RESTRICTED SUBSTANCE MANAGEMENT STANDARD WSS-M99P9999 A1 TO SAFEGUARD HEALTH SAFETY AND THE ENVIRONMENT			
DRAFTED IN ACCORDANCE WITH FORD MOTOR COMPANY ENGINEERING CAD AND DRAFTING STANDARDS VERSION 27.0		3RD ANGLE PROJ DIMENSIONS ARE IN MILLIMETERS	
CAD TYPE X-E3	CAD LOC. -----	CAD FILE PHJC46-70C271-A	DTM IS MASTER
OPER NO. -----	UNIT -----	DRAWING	SIZE A1
DESIGN agezer1	DETAIL -----	TITLE: H625 - 2019 LP3 Design HEATED SEATS / SEAT BELT MINDER	SHT 1 OF 1
CHECKED -----	SAFETY -----		
SCALE NTS	DATE 20160303	DIVISION: EESE PLANT: -----	

Modified By: ABEKEL
Date Changed: 11/24/2019

H625 2019 LP3 Design
C18.01 - POWER WINDOWS

LTRS	REVISIONS		
ORIGINATOR	CHECKER	ENGR APP	MATL APP

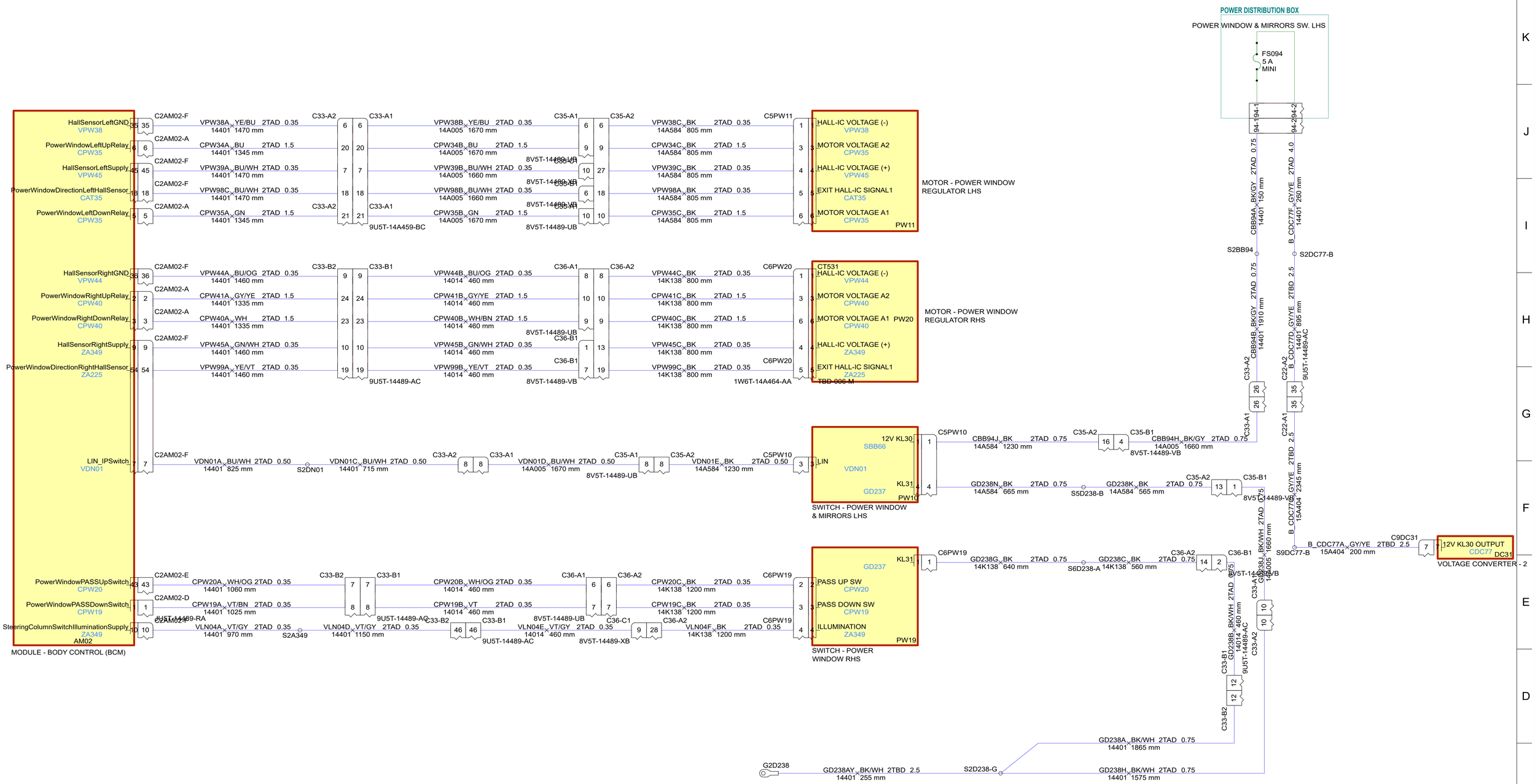

REFERENCE		
PART MUST COMPLY WITH RESTRICTED SUBSTANCE MANAGEMENT STANDARD WSS-M99P9999 A1 TO SAFEGUARD HEALTH SAFETY AND THE ENVIRONMENT		
DRAFTED IN ACCORDANCE WITH FORD MOTOR COMPANY ENGINEERING CAD AND DRAFTING STANDARDS VERSION 27.0		3RD ANGLE PROJ DIMENSIONS ARE IN MILLIMETERS
CAD TYPE: X-E3	CAD LOC.: TCE	CAD FILE: PHJC46-70C340-A — DTM IS MASTER
OPER NO.: N/A	UNIT: N/A	DRAWING — SIZE: A1
DESIGN: sakay	DETAIL: -----	TITLE: H625 - 2019 LP3 Design POWER WINDOWS — SHT 1 OF 1
CHECKED: -----	SAFETY: MFG USE	
SCALE: NTS	DATE: 20161222	DIVISION: EESE
		PLANT: N/A

Modified By: ABEKEL
Date Changed: 11/24/2016

H625 2019 LP3 Design
C19.01 POWER SUNROOF

LTRS	REVISIONS		
ORIGINATOR	CHECKER	ENGR APP	MATL APP

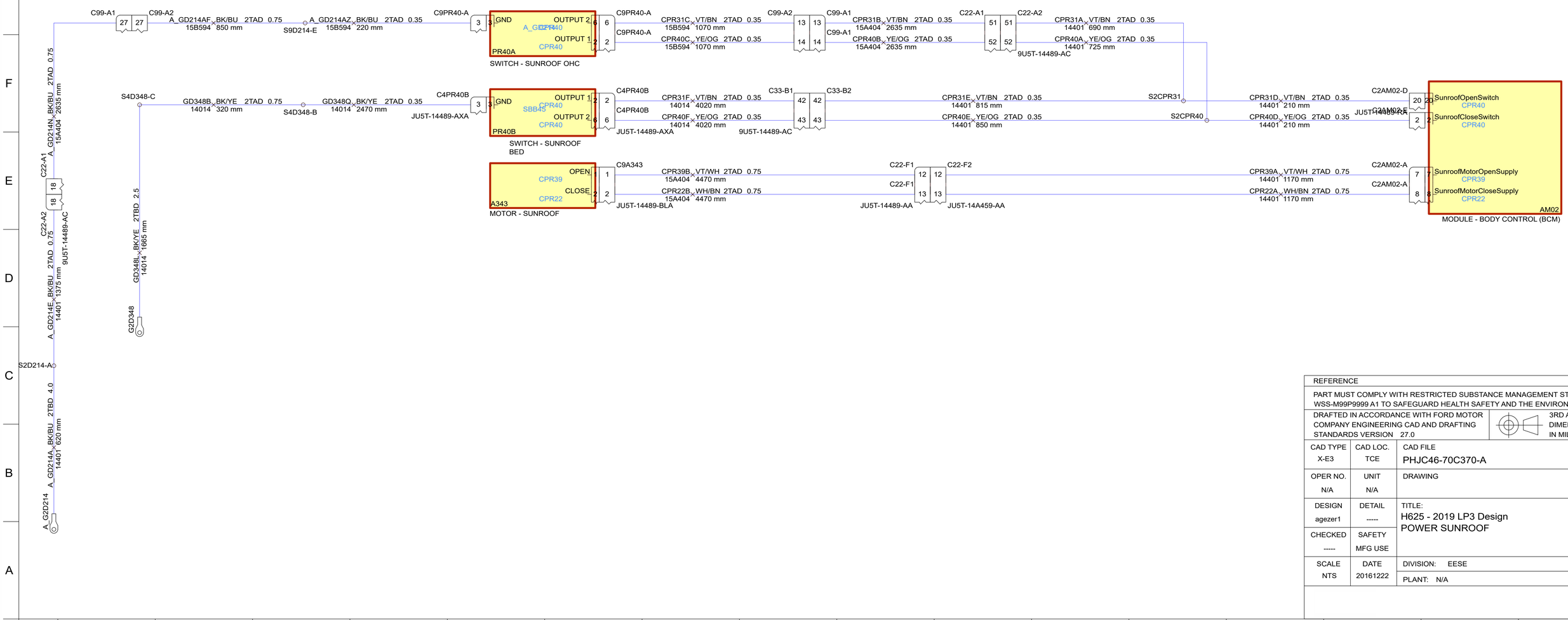

REFERENCE			
PART MUST COMPLY WITH RESTRICTED SUBSTANCE MANAGEMENT STANDARD WSS-M99P9999 A1 TO SAFEGUARD HEALTH SAFETY AND THE ENVIRONMENT			
DRAFTED IN ACCORDANCE WITH FORD MOTOR COMPANY ENGINEERING CAD AND DRAFTING STANDARDS VERSION 27.0		3RD ANGLE PROJ DIMENSIONS ARE IN MILLIMETERS	
CAD TYPE X-E3	CAD LOC. TCE	CAD FILE PHJC46-70C370-A	DTM IS MASTER
OPER NO. N/A	UNIT N/A	DRAWING	SIZE A1
DESIGN agezer1	DETAIL -----	TITLE: H625 - 2019 LP3 Design POWER SUNROOF	SHT 1 OF 1
CHECKED -----	SAFETY MFG USE		
SCALE NTS	DATE 20161222	DIVISION: EESE	
		PLANT: N/A	

Modified By: ABEKEL
Date Changed: 11/22/2019

LTRS	REVISIONS		
ORIGINATOR	CHECKER	ENGR APP	MATL APP

H625 2019 LP3 Design
C21.01 - WIPER WASHER - LANE DEPARTURE WARNING & RAIN SENSOR

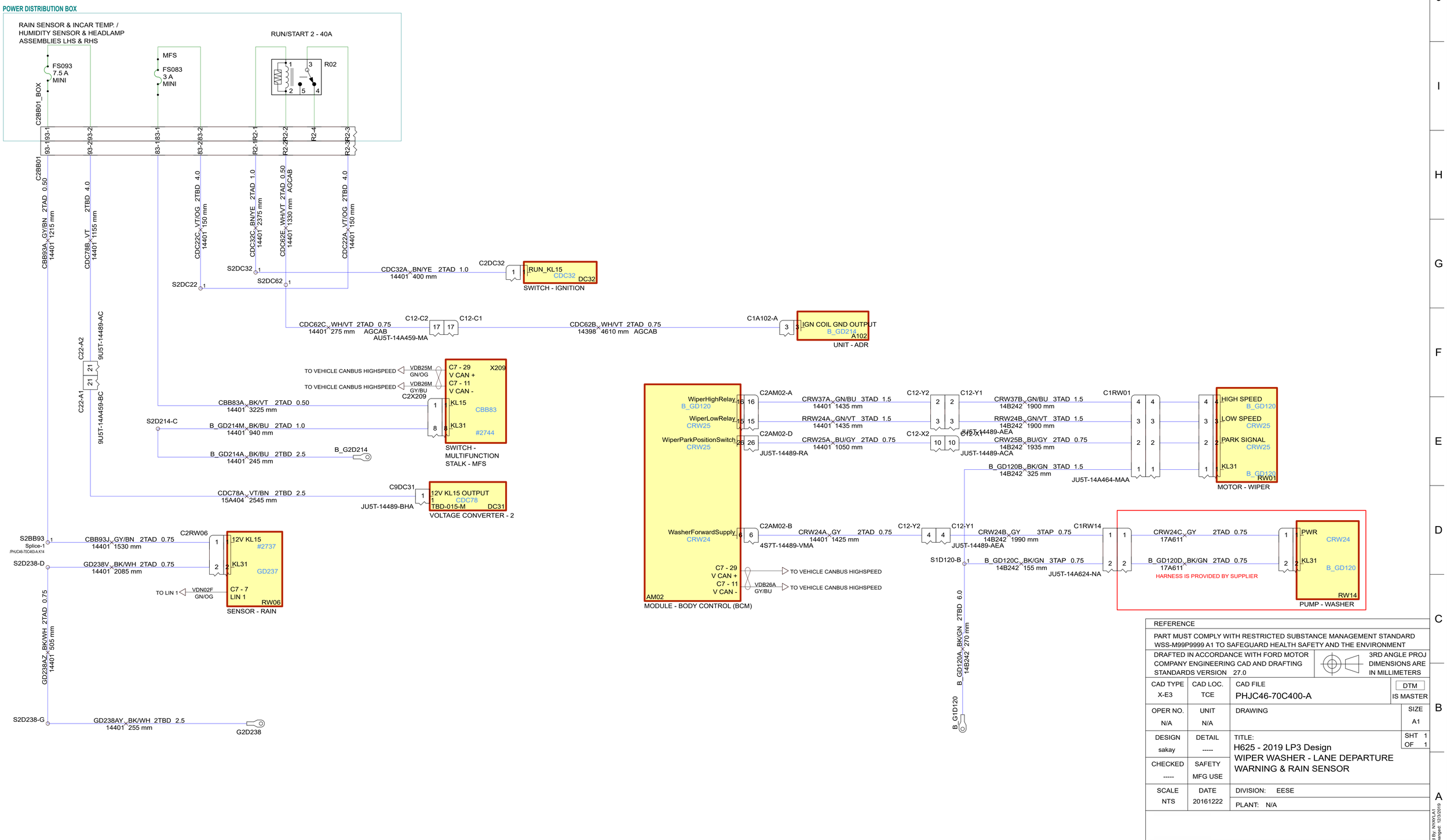

REFERENCE			
PART MUST COMPLY WITH RESTRICTED SUBSTANCE MANAGEMENT STANDARD WSS-M99P9999 A1 TO SAFEGUARD HEALTH SAFETY AND THE ENVIRONMENT			
DRAFTED IN ACCORDANCE WITH FORD MOTOR COMPANY ENGINEERING CAD AND DRAFTING STANDARDS VERSION 27.0		3RD ANGLE PROJ DIMENSIONS ARE IN MILLIMETERS	
CAD TYPE X-E3	CAD LOC. TCE	CAD FILE PHJC46-70C400-A	DTM IS MASTER
OPER NO. N/A	UNIT N/A	DRAWING	SIZE A1
DESIGN sakay	DETAIL -----	TITLE: H625 - 2019 LP3 Design WIPER WASHER - LANE DEPARTURE WARNING & RAIN SENSOR	SHT 1 OF 1
CHECKED -----	SAFETY MFG USE		
SCALE NTS	DATE 20161222	DIVISION: EESE	
		PLANT: N/A	

Modified By: NYAYLA1
Date Changed: 12/5/2019

LTRS	REVISIONS		
ORIGINATOR	CHECKER	ENGR APP	MATL APP

H625 2019 LP3 Design
C21.04 - HEATED WINDSHIELD

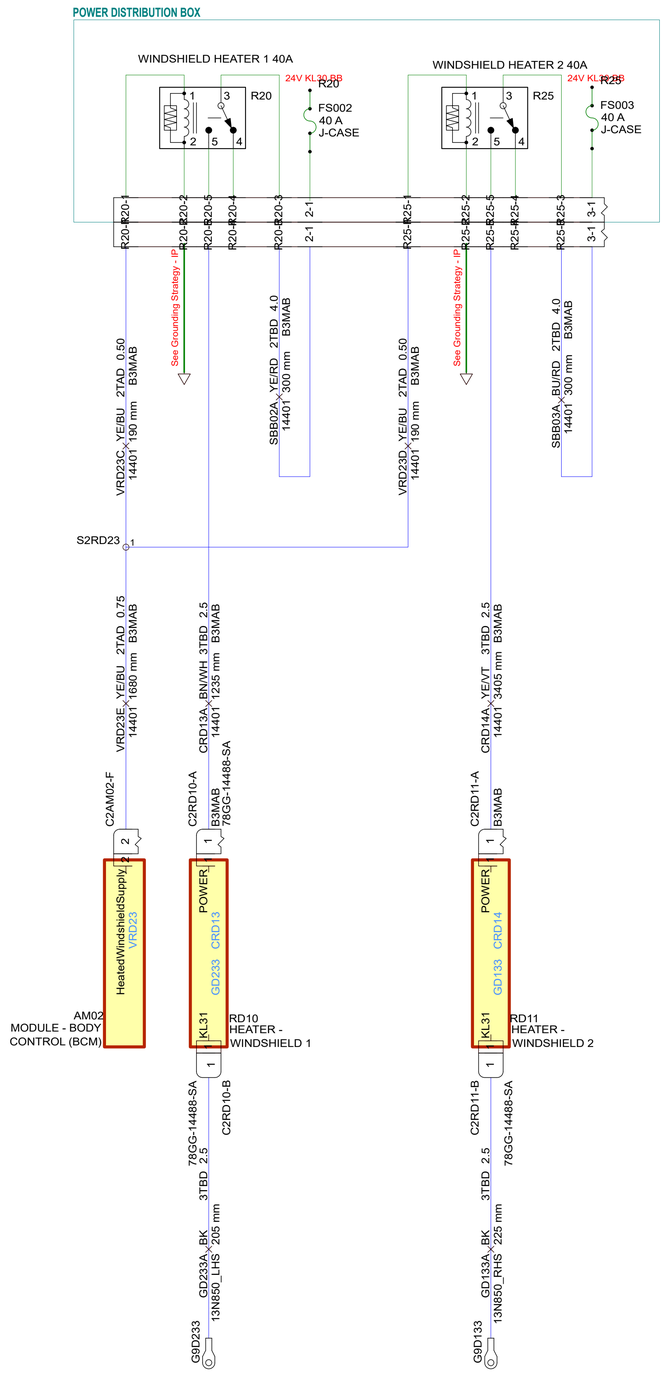

REFERENCE			
PART MUST COMPLY WITH RESTRICTED SUBSTANCE MANAGEMENT STANDARD WSS-M99P9999 A1 TO SAFEGUARD HEALTH SAFETY AND THE ENVIRONMENT			
DRAFTED IN ACCORDANCE WITH FORD MOTOR COMPANY ENGINEERING CAD AND DRAFTING STANDARDS VERSION 27.0			3RD ANGLE PROJ DIMENSIONS ARE IN MILLIMETERS
CAD TYPE X-E3	CAD LOC. -----	CAD FILE PHJC46-70C403-A	DTM IS MASTER
OPER NO. -----	UNIT -----	DRAWING	SIZE A1
DESIGN sakay	DETAIL -----	TITLE: H625 - 2019 LP3 Design HEATED WINDSHIELD	SHT 1 OF 1
CHECKED -----	SAFETY -----		
SCALE NTS	DATE 20161123	DIVISION: EESE PLANT: -----	

Modified By: NYAYLA1
Date Changed: 12/5/2019

H625 2019 LP3 Design
C22.06 - FLEET MANAGEMENT

LTRS	REVISIONS		
ORIGINATOR	CHECKER	ENGR APP	MATL APP

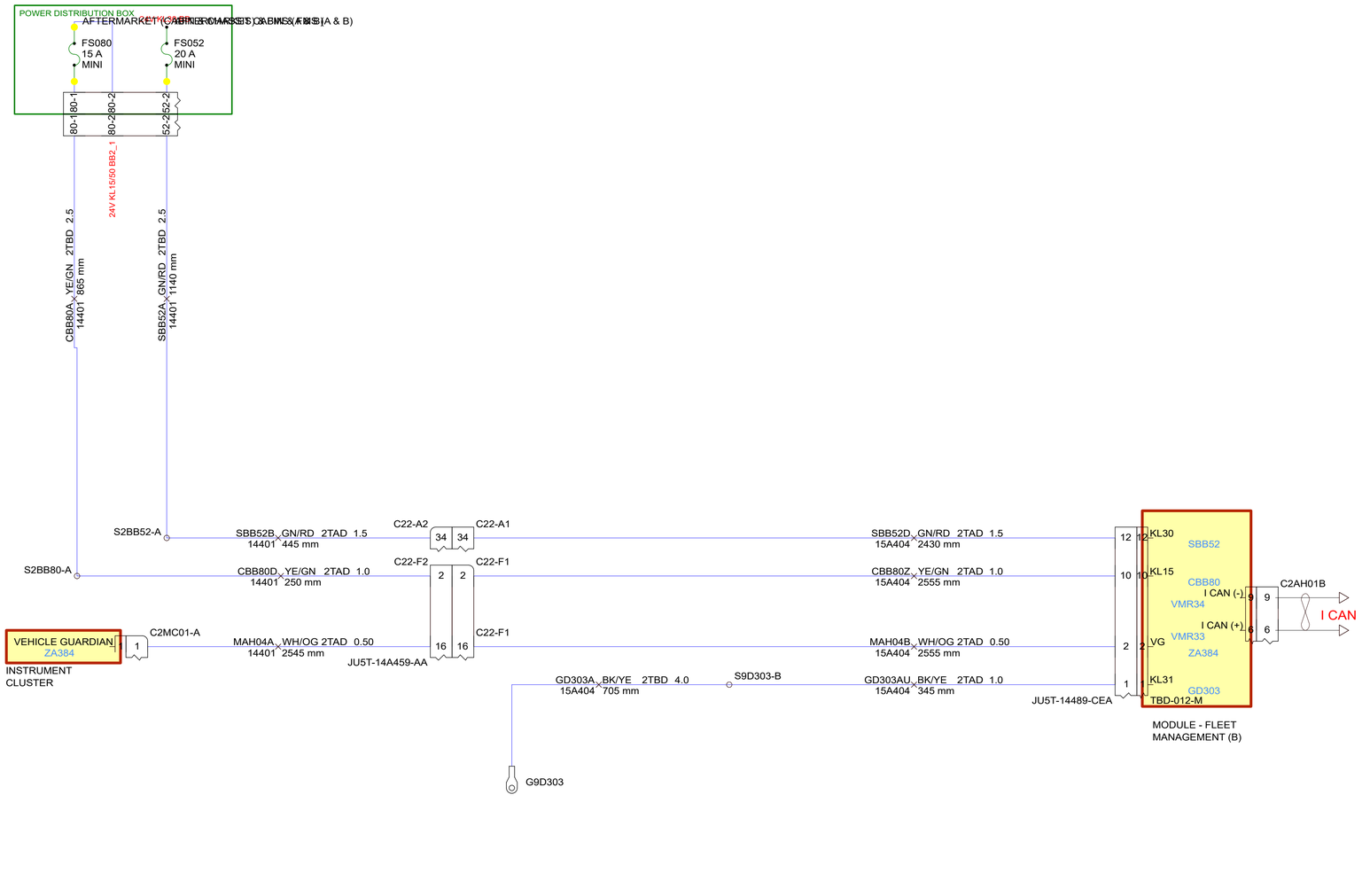

REFERENCE			
PART MUST COMPLY WITH RESTRICTED SUBSTANCE MANAGEMENT STANDARD WSS-M99P9999 A1 TO SAFEGUARD HEALTH SAFETY AND THE ENVIRONMENT			
DRAFTED IN ACCORDANCE WITH FORD MOTOR COMPANY ENGINEERING CAD AND DRAFTING STANDARDS VERSION 27.0			3RD ANGLE PROJ DIMENSIONS ARE IN MILLIMETERS
CAD TYPE X-E3	CAD LOC.	CAD FILE PHJC46-70C425-A	DTM IS MASTER
OPER NO. N/A	UNIT N/A	DRAWING	SIZE A1
DESIGN fkarade3	DETAIL -----	TITLE: H625 - 2019 LP3 Design FLEET MANAGEMENT	SHT 1 OF 1
CHECKED -----	SAFETY MFG USE		
SCALE N/A	DATE 20161129	DIVISION: EESE	
		PLANT: N/A	

Modified By: ABEKEL
Date Changed: 11/25/2019

H625 2019 LP3 Design
C22.08 - TACHOGRAPH

LTRS	REVISIONS		
ORIGINATOR	CHECKER	ENGR APP	MATL APP

POWER DISTRIBUTION BOX

PARK LAMPS 20A

24V KL30 BB
R19
FS016
15 A
MINI
C2BB01_BOX
16-2 16-2
C2BB01
SBB16A 0.75 VT/RD 2TBD 2.5 14401 300 mm

R19 1 3 2 5 4

R19-1 R19-2 R19-5 R19-4 R19-3
See Grounding Strategy - IP

TACHOGRAPH
FS071
5 A
MINI
71-1 71-1
CBB09A 0.75 VT/GY 2TAD 14401 1155 mm

24V KL15/50 BB1_1
71-2 71-2

TACHOGRAPH
FS064
3 A
MINI
ADR
64-1 64-1
SBB64A 0.75 VT/RD 2TAD 14401 1155 mm

64-2 64-2
MDC62B 0.75 GN/OG 2TAD AGCAB 14401 1565 mm
2TAD 0.75 AGCAA
SBB17D RD 14401 100 mm
C12-F2
M32
18
C12-F1

24V KL30 BB
TACHOGRAPH
FS017
5 A
MINI
17-2 17-2
SBB17A 0.75 RD 2TAD AGCAB 14401 1155 mm

AM02
RearParkingLightSupply
CLF61 14
TBD-016-M
14
C2AM02-A
4S7T-14489-VLA
MODULE - BODY CONTROL (BCM)

LMP07A BN 2TAD 0.35 14401 1745 mm

LMP07AA BU/WH 2TBD 2.5 14401 150 mm
S2LM07

CT384
VMC39
AH04 TBD-010-M
7 7
C9AH04
4S7T-14A459-VJA
CONNECTOR - AFTERMARKET ROOF

VMC39S BU 2TAD 0.35 15A404 555 mm

LMP07BA BU/WH 2TAD 1.0 14401 1005 mm AGCAB

TO VEHICLE CANBUS HIGHSPEED VDB26M GY/BU
TO VEHICLE CANBUS HIGHSPEED VDB25M GN/OG
MC35
C1 - 4
V CAN +
C1 - 8
V CAN -
HRN-15B594 MC35-2
SPEED PULSE OUTPUT VMC39 TBD-007-M
BATTERY GROUND GD108
KL30 SBB64
KL15 CBB09
KL31 (CHASSIS) #2744
KL30 (ADR UNIT) SBB64
ILLUMINATION POWER SUPPLY
SENSOR SUPPLY CCB36
SENSOR GROUND RCB36
SP SEN RT (HALL SIG) VCB35
SP SEN RT (TACH SIG) VMC39
TACHOGRAPH

C99-A1 20 20 C99-A2
GD108E BK/VT 2TAD 1.5 15B594 825 mm
C9MC35-A 5 5
C99-A1 5 5 C99-A2
GD352D BK/BU 2TAD 0.75 15B594 825 mm
C9MC35-A 6 6

HRN-15B594 C9MC35-B
VMC39T BU 2TAD 0.35 15B594 825 mm
XC3T-14489-BA
C9MC35-A
SBB64C VT/RD 2TAD 0.75 15B594 825 mm
CBB09C VT/GY 2TAD 0.75 15B594 825 mm
HRN-15B594 C9MC35-D
SBB17C RD 2TAD 0.75 15B594 885 mm
C9MC35-A
LMP07BC BU/WH 2TAD 1.0 15B594 825 mm
HRN-15B594 C9MC35-B
CCB36A BU/GY 2TAD 0.35 15B594 832 mm
RCB36A YE/BU 2TAD 0.35 15B594 832 mm
832 mm 15B594 0.35 2TAD BN/WH VCB35A
HRN-15B594
VMC39A BU 2TAD 0.35 15B594 832 mm

C99-A2 2 3 4 10 23 6 7 9 C99-A1

C22-A1 42 43 48 44 45 46 47 C22-A2
SBB64B VT/RD 2TAD 0.75 15A404 2635 mm
CBB09B VT/GY 2TAD 0.75 15A404 2635 mm
SBB17B RD 2TAD 0.75 15A404 2635 mm
LMP07C BU/WH 2TAD 1.0 15A404 265 mm
S9LM07
CCB36B BU/GY 2TAD 0.35 15A404 2658 mm
RCB36B YE/BU 2TAD 0.35 15A404 2658 mm
VCB35B BN/WH 2TAD 0.35 15A404 2658 mm
VMC39B BU 2TAD 0.35 15A404 2658 mm
9U5T-14489-AC

LMP07BB BU/WH 2TAD 1.0 15A404 2550 mm
C22-A1 36 36 C22-A2
9U5T-14489-AC
LMP07D BU/WH 2TAD 1.0 15A404 290 mm

C1A102-A
MDC62A GN/OG 2TAD 0.75 14398 4595 mm AGCAB
2
KL30 OUTPUT
UNIT - ADR

C99-A1 20 20 C99-A2
GD108E BK/VT 2TAD 1.5 15A404 2635 mm
C99-A1 5 5 C99-A2
GD352B BK/BU 2TAD 0.75 15A404 1565 mm
C22-A1 37 37 S9D345
C22-A2 37 37 9U5T-14489-AC
C22-A2 2 TBD 4.0 15A404 390 mm
G9D352
C12-C2 2 2 C12-C1
GD108G BK/VT 2TAD 1.5 14401 1070 mm
AU5T-14A459-MA

VMC39E BU 2TAD 0.35 14401 1039 mm
VCB35E BN/WH 2TAD 0.35 14401 1039 mm
RCB36E YE/BU 2TAD 0.35 14401 1039 mm
CCB36E BU/GY 2TAD 0.35 14401 1039 mm

C12-G2 9 10 11 12 C12-G1
CCB36C BU/GY 2TAD 0.75 15A808 3916 mm
RCB36C YE/BU 2TAD 0.75 15A808 3916 mm
VCB35C BN/WH 2TAD 0.75 15A808 3916 mm
VMC39C BU 2TAD 0.75 15A808 3916 mm
EU5T-14A459-DC
C12-G1 9 10 11 12
EU5T-14489-DB

C11-P1 1 2 3 4 C11-P2

CCB36D BU/GY 2TAD 0.75 705 mm 14K039 FD2AA
CCB36D1 BU/GY 0.75 880 mm FD2AB
RCB36D YE/BU 2TAD 0.75 705 mm 14K039 FD2AA
RCB36D1 YE/BU 0.75 880 mm FD2AB
VCB35D BN/WH 2TAD 0.75 705 mm 14K039 FD2AA
VCB35D1 BN/WH 0.75 880 mm FD2AB
VMC39D BU 2TAD 0.75 705 mm 14K039 FD2AA
VMC39D1 BU 0.75 880 mm FD2AB

C1E822
E822-1 E822
1 SENSOR PWR CCB36
2 SENSOR GND RCB36
3 HALL VCB35
4 TACH VMC39
SENSOR - VEHICLE SPEED (VSS)

A_GD108-A
BATTERY +12V
BATTERY - 12V
GD108H BK/VT 2TAD 1.5 14398 5140 mm

REFERENCE			
PART MUST COMPLY WITH RESTRICTED SUBSTANCE MANAGEMENT STANDARD WSS-M99P9999 A1 TO SAFEGUARD HEALTH SAFETY AND THE ENVIRONMENT			
DRAFTED IN ACCORDANCE WITH FORD MOTOR COMPANY ENGINEERING CAD AND DRAFTING STANDARDS VERSION 27.0		3RD ANGLE PROJ DIMENSIONS ARE IN MILLIMETERS	
CAD TYPE X-E3	CAD LOC. -----	CAD FILE PHJC46-70C427-A	DTM IS MASTER
OPER NO. -----	UNIT -----	DRAWING	SIZE A1
DESIGN sakay	DETAIL -----	TITLE: H625 - 2019 LP3 Design TACHOGRAPH	SHT 1 OF 1
CHECKED -----	SAFETY -----		
SCALE NTS	DATE 20160621	DIVISION: EESE	
		PLANT: -----	

Modified By: IVYAYLAS
Data Changed: 12/5/2019

H625 2019 LP3 Design
C22.09 - ERA GLONASS SYSTEM

LTRS	REVISIONS		
ORIGINATOR	CHECKER	ENGR APP	MATL APP

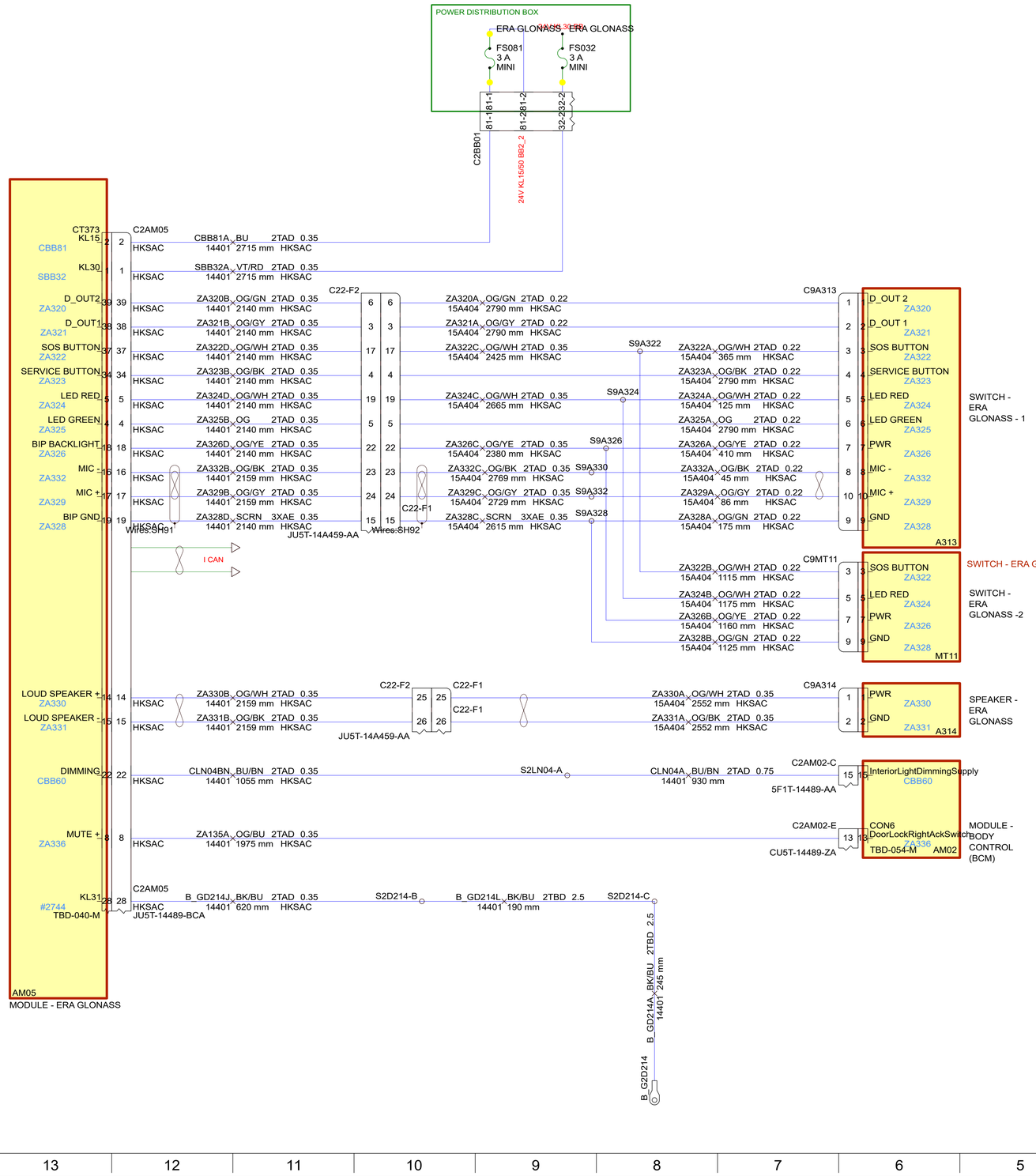

REFERENCE

PART MUST COMPLY WITH RESTRICTED SUBSTANCE MANAGEMENT STANDARD WSS-M99P9999 A1 TO SAFEGUARD HEALTH SAFETY AND THE ENVIRONMENT

DRAFTED IN ACCORDANCE WITH FORD MOTOR COMPANY ENGINEERING CAD AND DRAFTING STANDARDS VERSION 27.0

3RD ANGLE PROJ
DIMENSIONS ARE IN MILLIMETERS

CAD TYPE	CAD LOC.	CAD FILE	DTM
X-E3	TCE	PHJC46-70C428-A	IS MASTER
OPER NO.	UNIT	DRAWING	SIZE
N/A	N/A		A1
DESIGN	DETAIL	TITLE: H625 - 2019 LP3 Design ERA GLONASS SYSTEM	SHT 1 OF 1
enalbant	-----		
CHECKED	SAFETY		
-----	MFG USE		
SCALE	DATE	DIVISION: EESE	
NTS	20120101	PLANT: N/A	

Modified By: NYAYLA1
Date Changed: 12/3/2019

H625 2019 LP3 Design
C23.02 TRAILER TOW & AFTERMARKET CONNECTORS

LTRS	REVISIONS		
ORIGINATOR	CHECKER	ENGR APP	MATL APP

POWER DISTRIBUTION BOX

BAĞLANTILARI EKSİK!

ENGINE STOP 20A — R07 — FS080 15 A MINI

AFTERMARKET (CABIN & CHASSIS) PARK LAMPS & FMS (A & B) — 24V KL15/30 BB2_1 — FS048 20 A MINI

AFTERMARKET (CABIN & CHASSIS) PARK LAMPS & FMS (A & B) — 24V KL30 BB — FS052 20 A MINI

PARK LAMPS 20A — R19 — FS016 15 A MINI

TRAILER 15-PIN & AFTERMARKET (CABIN & CHASSIS) PARK LAMPS — 24V KL30 BB — FS059 10 A MINI

HORN 20A — R08 — FS043 15 A MINI

BACKUP LAMPS & BACKUP BUZZER 20A — R11 — FS085 10 A MINI

TRAILER 7-PIN — 24V KL15/30 BB2_3 — FS088 7.5 A MINI

STOP LAMPS 20A — R17 COIL — FS079 3 A MINI

R17 — 24V KL15/30 BB2_4 — FS023 10 A MINI

FS058 3 A MINI

TRAILER 7-PIN — 24V KL30 BB — FS031 30 A MINI

AFTERMARKET PARKING COOLER — 24V KL30 BB — FS004 40 A J-CASE

R7-7:1 R7-7:2 R7-7:5 R7-7:4 R7-7:3 — 80-18:1 — 48-14:1 — 52-25:2 — R19-19:1 R19-19:2 R19-19:5 R19-19:4 R19-19:3 — 16-21:2 — 59-59:1 — 89-259:2 — R8-8:1 R8-8:2 R8-8:5 R8-8:4 R8-8:3 — 43-143:1 — R11-11:1 R11-11:2 R11-11:5 R11-11:4 R11-11:3 — 85-165:1 — 88-188:1 — 79-179:1 — R17-17:1 R17-17:2 R17-17:5 R17-17:4 R17-17:3 — 23-123:1 — 58-158:1 — 58-258:2 — 31-231:2 — 4-1:1

SBB04A_GN/RD_2TBD 6.0 14401 800 mm

SBB04B_GN/RD_2TBD 6.0 14401 355 mm — C22-A2 — 30

SBB04C_GN/RD_2TBD 6.0 14401 435 mm — C22-J2 — 1 — Parking Cooler Jumper Connector

S2BB04

C12-D1 — 3 — C12-D2 — 3 — AU5T-14489-SAA — ZA101C_OG_2TAD 0.75 14401 1145 mm — AU5T-14A459-NA — C2AM02-E — 37 — CON6 DamperConnectionSwitch CAT10 — TBD-054-M — CU5T-14489-ZA

MODULE - BODY CONTROL (BCM)

MODULE - FLEET MANAGEMENT (B)

AH01B — C7979 I CAN (+) VMR33 — 6 — C2AH01B — I CAN

I CAN (-) VMR34 — 9

KL15 CBB80 — 10 — CBB80Z_YE/GN_2TAD 1.0 15A404 2555 mm — C22-F1 — 2 2 — C22-F2 — CBB80D_YE/GN_2TAD 1.0 14401 250 mm — S2BB80-A

KL30 SBB52 — 12 — SBB52D_GN/RD_2TAD 1.5 15A404 2430 mm — 34 34 — SBB52B_GN/RD_2TAD 1.5 14401 445 mm — S2BB52-A

TBD-012-M — JU5T-14489-CEA — 9U5T-14A459-BC — 9U5T-14A459-AA — 9U5T-14489-AC

ECANHigh VMR33 — 14 — C2AM02-F

ECANLow VMR34 — 32 — C2AM02-F

TrailerLeftSupply CAT09 — 9 — C2AM02-A — CAT06B_YE_2TAD 1.5 14401 1420 mm

TrailerRightSupply CAT09 — 10 — CAT09B_GN_2TAD 1.5 14401 1420 mm

RearParkingLightSupply CLF61 — 14 — LMP07A_BN_2TAD 0.35 14401 1745 mm

RearFogLampsSupply CLS37 — 8 — C2AM02-B — CLS37A_BU_2TAD 1.5 14401 1040 mm — 4S7T-14489-VMA

ReverseGearSupply CAT16 — 7 — C2AM02-C — CAT16A_GY/BN_2TAD 0.50 14401 1730 mm — 5F1T-14489-AA

CON7 TrailerTagAxleLiftingSupply ZA175 — 38 — C2AM02-F — MAT60B_BU/GN_2TAD 0.75 14401 1545 mm

TBD-054-M — 9U5T-14489-TA

CruiseControlSetPlusSwitch ZA333 — 7 — C2AM02-D — ZA333A_OG_2TAD 0.75 14401 215 mm

CruiseControlOFFSwitch ZA334 — 25 — ZA334A_OG/YE_2TAD 0.75 14401 1110 mm

CruiseControlSetMinusSwitch CES06 — 43 — CES06D_BU/GN_2TAD 0.75 14401 525 mm

CruiseControlResumeSwitch ZA335 — 8 — ZA335A_OG/BU_2TAD 0.75 14401 1110 mm — JU5T-14489-RA — C2AM02-E

TrailerDetectionSwitch CAT04 — 1 — CAT04C_WH_2TAD 0.50 14401 1145 mm

AM02

CONNECTOR - AFTERMARKET CHASSIS

HORN CRH02 — 10 — C1AH03 — CRH02G_BU/WH_2TAD 1.5 14398 4325 mm — C12-C1 — 13 — C12-C2 — 13

MFS CC RESUME ZA335 — 7 — ZA335B_OG/BU_2TAD 0.75 14398 4355 mm — 7

MFS CC OFF ZA334 — 9 — ZA334B_OG/YE_2TAD 0.75 14398 4355 mm — C12-C1 — 4

MFS CC SET (+) ZA333 — 5 — ZA333D_OG_2TAD 0.75 14398 4355 mm — 5

MFS CC SET (-) CES06 — 6 — CES06F_BU/GN_2TAD 0.75 14398 4355 mm — CES06E_BU/GN_2TAD 0.35 14401 585 mm — 4 — 5 — AU5T-14A459-MA

PWR CBB59 — 1 — CBB59E_BN_2TAD 1.5 14398 1535 mm

PWR CAT10 — 11 — CBB58C_GY/OG_2TAD 1.5 14398 1660 mm

KL15 CBB80 — 2 — CBB80E_YE/GN_2TAD 1.5 14398 4355 mm — C12-C1 — 1 — C12-C2 — 1

KL30 SBB48 — 3 — SBB48B_VT/RD_3TAD 1.5 14398 4355 mm — 10 — SBB48C_VT/RD_2TBD 2.5 14401 255 mm

KL30 ZA340 — 12 — CLS44E_VT/BN_2TAD 0.75 14398 4355 mm — C12-C1 — 15 — CLS44C_VT/BN_2TAD 0.50 14401 1075 mm — S2LS44 — AU5T-14489-RAA — AU5T-14A459-MA

KL31-1 GD415 — 4 — GD415H_BK/VT_2TAD 1.5 14398 520 mm

KL31-2 GD415 — 8 — C1AH03 — GD415J_BK/VT_2TAD 1.5 14398 520 mm — S1D415-B

AH03

CONNECTOR - AFTERMARKET CABIN

GD415G_BK/VT_2TBD 4.0 14398 700 mm — G1D415

ZA336B_GN/WH_2TAD 1.5 14401 1335 mm

CLS44D_VT/BN_2TAD 0.75 14401 260 mm

CBB59C_BN/WH_2TAD 0.75 14401 615 mm

CBB80C_YE/GN_2TAD 1.0 14401 555 mm

CES06C_BU/GN_2TAD 0.35 14401 750 mm

CBB59F_GY/OG_2TAD 1.5 14401 1335 mm

SBB52C_GN/RD_2TBD 2.5 14401 280 mm

ZA339B_GY_2TAD 1.5 14401 1360 mm

ZA338A_GY_2TAD 1.5 14401 1369 mm

CBB59B_BN/WH_2TAD 1.5 14401 1330 mm

ZA333B_OG_2TAD 0.75 14401 950 mm

CRH02F_BU/WH_2TAD 1.5 14401 1060 mm

C2AH02 — I CAN — 17 18 — 3 — 19 — 1 — 2 — 6 — 15 — 10 — 11 — 12 — 14 — 5 — 9 — 7 — C2AH02

I CAN (+) VMR33 — I CAN (-) VMR34 — KL30 SBB52 — KL30 ZA340 — PARK LAMP CBB59 — KL15 CBB80 — MFS CC SET (-) CES06 — SPARE 6 CAT10 — KL30 SBB48 — SPARE 2 ZA340 — SPARE 3 ZA339 — SPARE 5 ZA335 — MFS CC SET (+) ZA333 — HORN CRH02

AH02

CONNECTOR - AFTERMARKET CABIN

HRN-158594 C5MC35-B — SPEED PULSE OUTPUT — VMC397 — TBD-007-M — XC3T-14489-BA — MC35

TACHOGRAPH

VMC397_BU_2TAD 0.35 15B594 825 mm — C99-A2 — 2 — C99-A1 — 2TAD 0.35 — 9U5T-14489-BC — 9U5T-14489-AC — C22-A2 — 31 — C22-A1 — 31 — 29 — 9U5T-14489-AC

VMC398_BU 15A404 555 mm — CBB80G_YE/GN_2TAD 1.0 15A404 2540 mm — SBB52E_GN/RD_2TAD 1.5 15A404 2540 mm — GD303AT_BK/YE_2TAD 1.5 15A404 415 mm — 14S7T-14A459-VA

CT394 — 7 — 4 — 5 — 1 — GD303A_BK/YE_2TBD 4.0 15A404 765 mm — S9D303-B — G9D303

VMC399 — KL15 CBB80 — KL30 SBB48 — KL31 GD303 — TBD-010-M

CONNECTOR - AFTERMARKET ROOF

S2RH02

C12-D2 — 6 6 — 1 1 — 9 9 — C12-D1

C12-D1 — 2 2 — C12-D2 — CRH02E_BU/WH_2TAD 1.5 14401 275 mm

ZA333C_OG 14401 865 mm — 2TAD 0.75 — CL544A_VT/BN_2TAD 0.75 14401 1160 mm

S2E506

CBB80F_YE/GN_2TBD 2.5 14401 290 mm

SBB48D_VT/RD_2TBD 2.5 14401 815 mm

S2BB48

CBB59B_BN/WH_2TAD 0.75 14401 720 mm

S2BB59

S2LM07

COIL GND R115 CRH04 — 11 — C2R115 — 2L1T-14A464-EA

CLOCKSPRING

S2LS37 — CLS37H_GN/WH_2TAD 1.5 14401 370 mm

C12-D2 — 8 8 — C12-D1 — AU5T-14A459-NA

CBB58E_GY/OG_2TAD 1.5 14398 2665 mm

S2LS43-A

C12-D2 — 13 13 — C12-D1 — AU5T-14A459-NA

S2ZA333

C12-A2 — 16 16 — 17 17 — 20 20 — C12-A1 — C12-A2

LMP07A_BN 2TAD 0.35 14401 1745 mm — See Grounding Strategy - sP

LMP07AA_BU/WH 2TBD 2.5 14401 150 mm — See Grounding Strategy - sP

SBB48A_BU/RD_2TAD 1.5 14401 300 mm

CAT16A_GY/BN_2TAD 0.50 14401 1730 mm — See Grounding Strategy - sP

CAT16G_GY/BN_2TAD 1.5 14401 1605 mm

CBB88A_BK_2TAD 0.50 14401 1665 mm

CBB79A_YT/WH_2TAD 0.50 14401 300 mm

MCA61A_WH/VT_2TAD 0.75 14401 1565 mm — CAT03E_GY/BN_2TAD 1.5 14401 1605 mm

SBB23A_WH/RD_2TAD 1.0 14401 300 mm

CBB59A_GY/OG_2TAD 0.75 14401 1565 mm

SBB31A_WH/RD_2TBD 4.0 14401 1605 mm

C12-D2 — 12 12 — C12-D1 — AU5T-14A459-NA

CBB59D_BK_2TAD 0.75 14398 2790 mm

C12-C2 — 3 3 — C12-C1 — AU5T-14A459-MA

CAT03E_GY/BN_2TAD 1.5 14398 2920 mm

C12-A2 — 15 — C12-A1 — AU5T-14A459-LA

AU5T-14489-PAA

S1AT16-B

C12-B2 — 6 — EU5T-14A459-AC

C12-B1 — 6 — EU5T-14489-AB

S1BB59-A

S1BB58-A

S1LS43-B

CCA26E_BU/GY_2TAD 1.5 14398 2900 mm

CBB58B_GY/OG_2TAD 0.75 14398 2755 mm

C12-C2 — 19 19 — C12-C1 — AU5T-14A459-MA

C12-F2 — 6 — C12-F1

MC481B_WH/VT_2TAD 0.75 14398 2425 mm

C12-A2 — 14 14 — C12-A1

C12-D2 — 11 11 — C12-D1

17 17 — AU5T-14A459-NA

TRAILER CAN - C_VDB04 — 8 — C1CB01-D

TRAILER CAN - C_VDB05 — 9 — C1CB01-D — HU5T-14489-SAA

CB01-C LAMP 2 — 11 — C1CB01-C — F5UT-14489-FAA

MC482 TBD-015-M

CB01 MODULE - EBS

TBD-018-M — C11-B2 — 13 13 — HRN-14398 C11-B1 — JU5T-14A464-AYA — VDC738_GN/WH_2TAD 0.75 14398 3350 mm — EU5T-14489-AB — C12-B1 — 7 7 — C12-B2 — EU5T-14A459-AC — VDC738_GN/WH_2TAD 0.75 14401 1565 mm

S1D481-C — S1D411-A — TBD-026-M

GD481A_BK/GN_2TBD 4.0 14398 865 mm — G1D481

GD411A_BK/BU_2TBD 4.0 14398 540 mm — G1D411

SBB04A_GN/RD_2TBD 6.0 14401 800 mm — S2BB04

CBB59H_BK_2TAD 1.5 14398 1090 mm — C11-Z1 — 23 — C11-Z2 — CBB59F_BK_3TAP 1.5 14F502 840 mm — 5 — HRN-14F502 C1AT23-B — HRN-14F502 — REAR LAMP LEFT CBB59

CBB59K_BN_2TAD 1.5 14398 1090 mm — 5 — CBB59G_BN_3TAP 1.5 14F502 840 mm — 6 — REAR LAMP RIGHT CBB59

CAT03H_GY/BN_2TAD 1.5 14398 990 mm — 19 — CAT03F_GY/BN_3TAP 1.5 14F502 840 mm — 8 — BACKUP LAMPS CAT03

CAT06A_YE_2TAD 1.5 14398 3940 mm — 21 — CAT06C_YE_3TAP 1.5 14F502 840 mm — 1 — TURN INDICATOR LEFT CAT09

CAT09A_GN_2TAD 1.5 14398 3940 mm — 22 — CAT09C_GN_3TAP 1.5 14F502 840 mm — 2 — TURN INDICATOR RIGHT CAT09

CLS37J_BU_2TAD 1.5 14398 3940 mm — 20 — CLS37K_BU_3TAP 1.5 14F502 840 mm — 3 — REAR FOG LAMP CLS37

ZA336C_GN/WH_2TAD 1.5 14398 3880 mm — 15 — ZA336D_GN/WH_3TAP 1.5 14F502 840 mm — 14 — SPARE 1 SBB52

CLS43C_RD_2TAD 1.5 14398 1040 mm — 17 — CLS43D_RD_3TAP 1.5 14F502 840 mm — 7 — STOP LAMP CCA26

ZA101D_OG_2TAD 1.5 14398 3880 mm — 18 — ZA101B_OG_3TAP 2.5 14F502 840 mm — 9 — SPARE 6 CAT10

MAT60A_BU/GN_2TAD 1.5 14398 3910 mm — 14 — MAT60C_BU/WH_3TAP 1.5 14F502 840 mm — 12 — SPARE 4 ZA175

ZA340A_BK/WH_2TAD 1.5 14398 3880 mm — 10 — ZA340D_BK/WH_3TAP 1.5 14F502 861 mm — 11 — SPARE 2 ZA340

ZA339B_GY_2TAD 1.5 14398 3880 mm — 9 — ZA339D_GY_3TAP 1.5 14F502 861 mm — 10 — SPARE 5 ZA339

ZA353A_BN/WH_2TAD 1.5 14398 3880 mm — 16 — ZA353D_BN/WH_3TAP 1.5 14F502 840 mm — 15 — SPARE 3 ZA353

GD411D_BK/BU_2TBD 2.5 14398 255 mm — 25 — GD411T_WH_3TAP 2.5 14F502 840 mm — 4 — HRN-14F502 — KL31-1 GD410

GD481X_BK/GN_2TBD 2.5 14398 585 mm — 26 — GD481Y_BK/BU_3TAP 2.5 14F502 840 mm — 13 — KL31-2 (DATA) GD410 — TBD-015-M

CONNECTOR - TRAILER 15-PIN

CAT04A_WH_2TAD 1.5 14398 3940 mm — 13 — CAT04F_WH_3TAP 1.5 14F502 810 mm — 5 — HRN-14F502 C1AT23-A — HRN-14F502 — WARNING DEVICE CAT04

SBB31C_RD_2TBD 4.0 14398 3880 mm — 1 — SBB31D_RD_3TAP 4.0 14F502 810 mm — 1 — KL30 SBB31

CBB88B_BK_2TAD 1.5 14398 3880 mm — 6 — CBB88C_BK_3TAP 1.5 14F502 810 mm — 2 — KL15 CBB88

C_VDB05A_GN/WH 2TAD 0.75 14398 4010 mm — 7 — C_VDB05B_GN/WH 3TAP 1.5 14F502 830 mm — 6 — EBS CAN + C_VDB04

C_VDB06A_BN/WH 2TAD 0.75 14398 4010 mm — 8 — C_VDB06B_BN/WH 3TAP 1.5 14F502 830 mm — 7 — EBS CAN - C_VDB05

GD411B_BK/BU 2TAD 1.5 14398 255 mm — 24 — GD411M_YE 3TAP 1.5 14F502 810 mm — 3 — HRN-14F502 — KL31 ELECTRONIC MODULE (-) GD410

GD411C_BK/BU 2TBD 4.0 14398 255 mm — C11-Z2 — 2 — GD411S_BN 3TAP 1.5 14F502 810 mm — 4 — KL31 MAGNETIC VALVE (-) GD410

TBD-026-F — TBD-007-F — AT23-A

CONNECTOR - TRAILER 7-PIN ISO 7638

MODULE - BODY CONTROL (BCM)

REFERENCE	N/A
PART MUST COMPLY WITH RESTRICTED SUBSTANCE MANAGEMENT STANDARD WSS-M99P9999 A1 TO SAFEGUARD HEALTH SAFETY AND THE ENVIRONMENT	
DRAFTED IN ACCORDANCE WITH FORD MOTOR COMPANY ENGINEERING CAD AND DRAFTING STANDARDS VERSION 27.0	3RD ANGLE PROJ DIMENSIONS ARE IN MILLIMETERS
CAD TYPE: X-E3	CAD LOC.:
CAD FILE: PHJC46-70C441-A1	DTM: IS MASTER
OPER NO.: N/A	UNIT: N/A
DRAWING	SIZE: A0
DESIGN: fkarade3	DETAIL: -----
TITLE: H625 - 2019 LP3 Design TRAILER TOW & AFTERMARKET CONNECTORS	SHT 1 OF 1
CHECKED: -----	SAFETY: MFG USE
SCALE: N/A	DATE: 20161020
DIVISION: EESE	
PLANT: N/A	

PRINTED COPIES ARE UNCONTROLLED

SOURCE BY: M2DRFB.DWG — ARCXEL 11/25/2020

H625 2019 LP3 Design
C23.05 INTARDER SYSTEM

LTRS	REVISIONS		
ORIGINATOR	CHECKER	ENGR APP	MATL APP

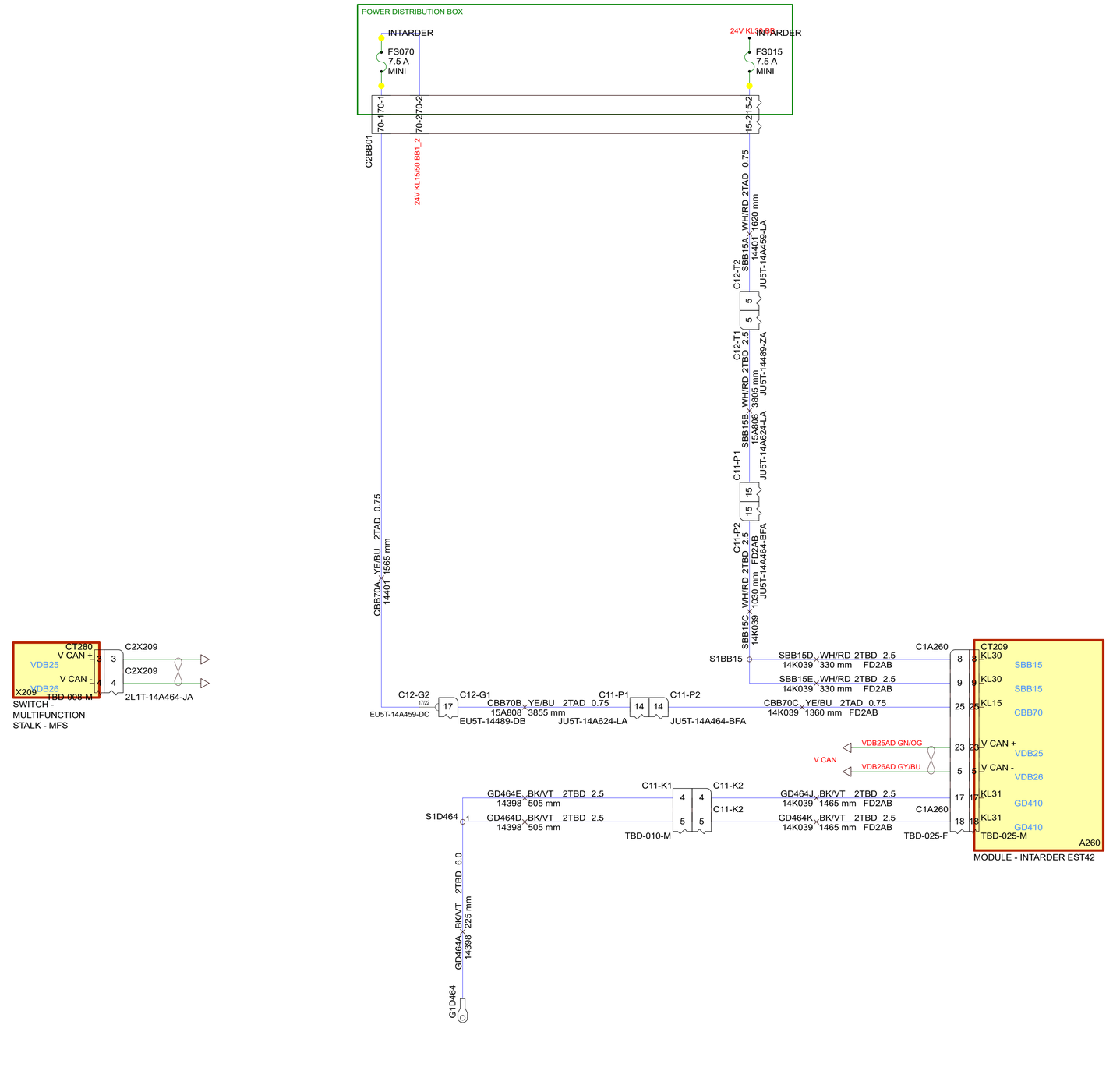

REFERENCE			
PART MUST COMPLY WITH RESTRICTED SUBSTANCE MANAGEMENT STANDARD WSS-M99P9999 A1 TO SAFEGUARD HEALTH SAFETY AND THE ENVIRONMENT			
DRAFTED IN ACCORDANCE WITH FORD MOTOR COMPANY ENGINEERING CAD AND DRAFTING STANDARDS VERSION 27.0		3RD ANGLE PROJ DIMENSIONS ARE IN MILLIMETERS	
CAD TYPE X-E3	CAD LOC. -----	CAD FILE PHJC46-70C444-A	DTM IS MASTER
OPER NO. -----	UNIT -----	DRAWING	SIZE A1
DESIGN fkarade3	DETAIL -----	TITLE: H625 - 2019 LP3 Design INTARDER SYSTEM	SHT 1 OF 1
CHECKED -----	SAFETY -----		
SCALE NTS	DATE 20160302	DIVISION: EESE	
		PLANT: -----	

Modified By: NVAYLA1
Date Changed: 12/3/2019

LTRS	REVISIONS		
ORIGINATOR	CHECKER	ENGR APP	MATL APP

H625 2019 LP3 Design
C24.01 POWER SUNBLIND

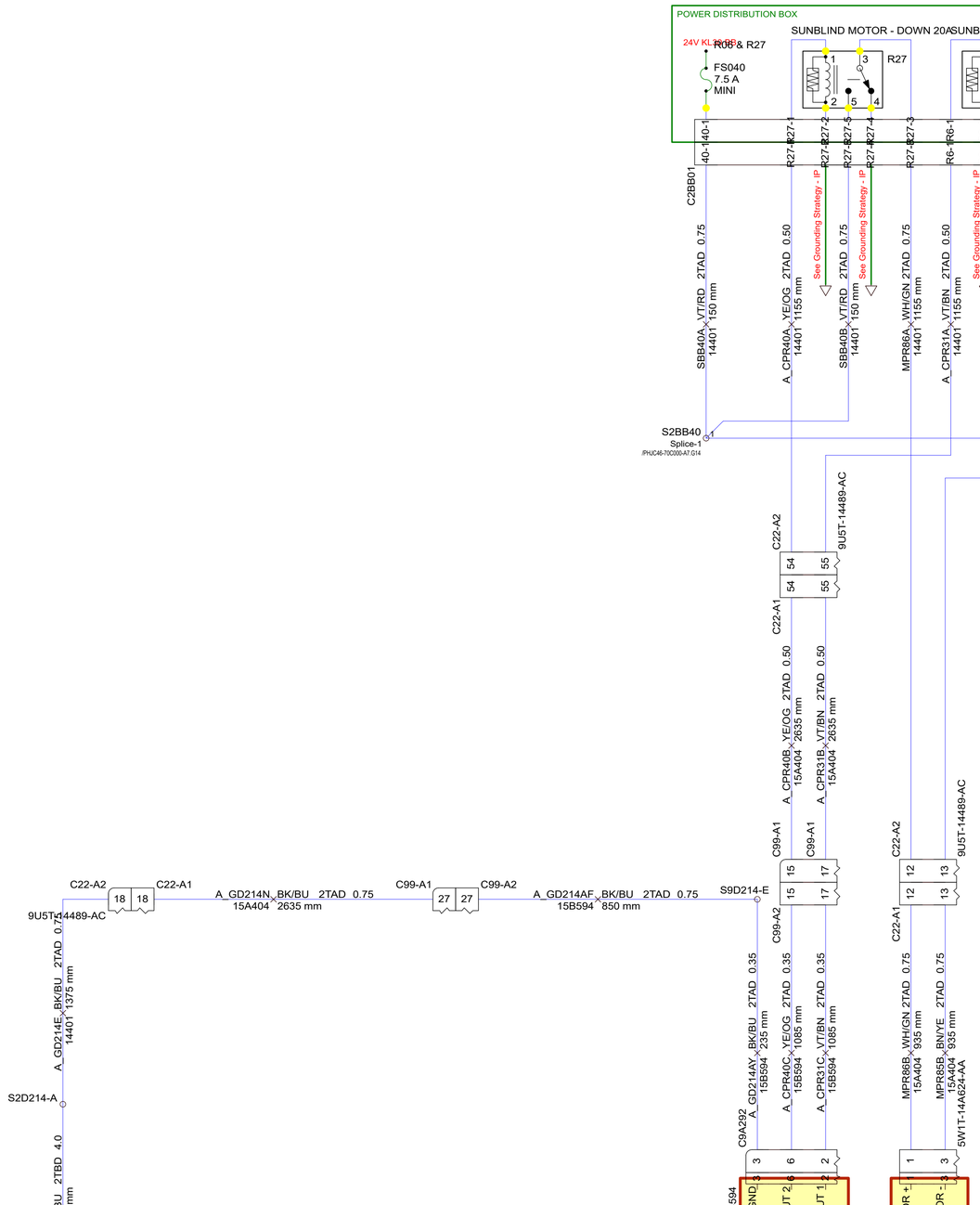

REFERENCE	
PART MUST COMPLY WITH RESTRICTED SUBSTANCE MANAGEMENT STANDARD WSS-M99P9999 A1 TO SAFEGUARD HEALTH SAFETY AND THE ENVIRONMENT	
DRAFTED IN ACCORDANCE WITH FORD MOTOR COMPANY ENGINEERING CAD AND DRAFTING STANDARDS VERSION 27.0	3RD ANGLE PROJ DIMENSIONS ARE IN MILLIMETERS
CAD TYPE: X-E3	CAD LOC.: TCE
CAD FILE: PHJC46-70C460-A	DTM: IS MASTER
OPER NO.: N/A	UNIT: N/A
DRAWING	SIZE: A1
DESIGN: fkarade3	DETAIL: -----
TITLE: H625 - 2019 LP3 Design POWER SUNBLIND	SHT 1 OF 1
CHECKED: -----	SAFETY: MFG USE
SCALE: NTS	DATE: 20160608
DIVISION: EESE	
PLANT: N/A	

Modified By: ABEKEL
Date Changed: 11/26/2019

H625 2019 LP3 Design
C24.03 - CIGAR LIGHTER - POWER POINTS

LTRS	REVISIONS		
ORIGINATOR	CHECKER	ENGR APP	MATL APP

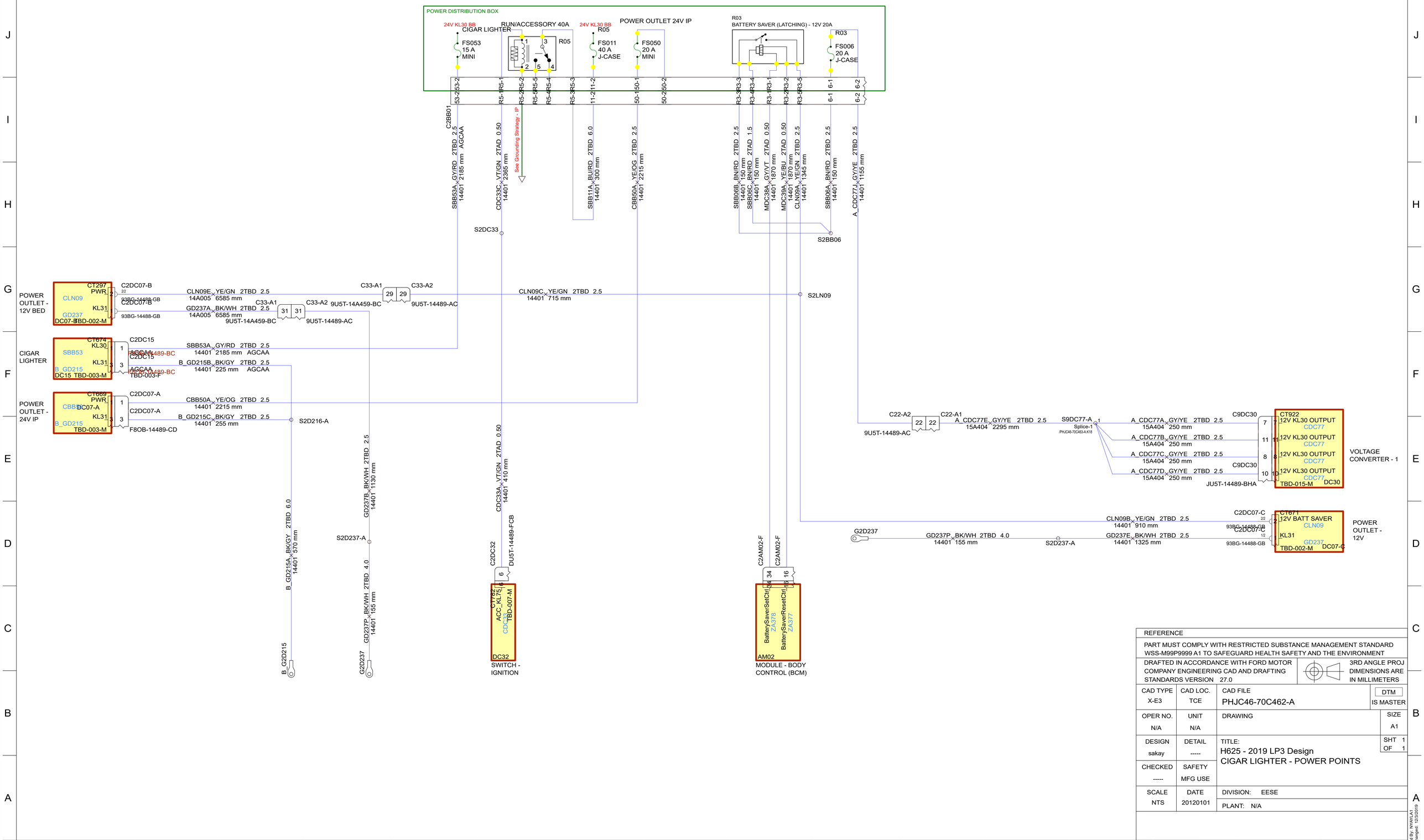

REFERENCE			
PART MUST COMPLY WITH RESTRICTED SUBSTANCE MANAGEMENT STANDARD WSS-M99P9999 A1 TO SAFEGUARD HEALTH SAFETY AND THE ENVIRONMENT			
DRAFTED IN ACCORDANCE WITH FORD MOTOR COMPANY ENGINEERING CAD AND DRAFTING STANDARDS VERSION 27.0			3RD ANGLE PROJ DIMENSIONS ARE IN MILLIMETERS
CAD TYPE X-E3	CAD LOC. TCE	CAD FILE PHJC46-70C462-A	DTM IS MASTER
OPER NO. N/A	UNIT N/A	DRAWING	SIZE A1
DESIGN sakay	DETAIL -----	TITLE: H625 - 2019 LP3 Design CIGAR LIGHTER - POWER POINTS	SHT 1 OF 1
CHECKED -----	SAFETY MFG USE		
SCALE NTS	DATE 20120101	DIVISION: EESE PLANT: N/A	

Modified By: NYKYLA1
Last Changed: 12/3/2019

H625 2019 LP3 Design
C24.04 24V / 12V VOLTAGE CONVERTER

LTRS	REVISIONS		
ORIGINATOR	CHECKER	ENGR APP	MATL APP

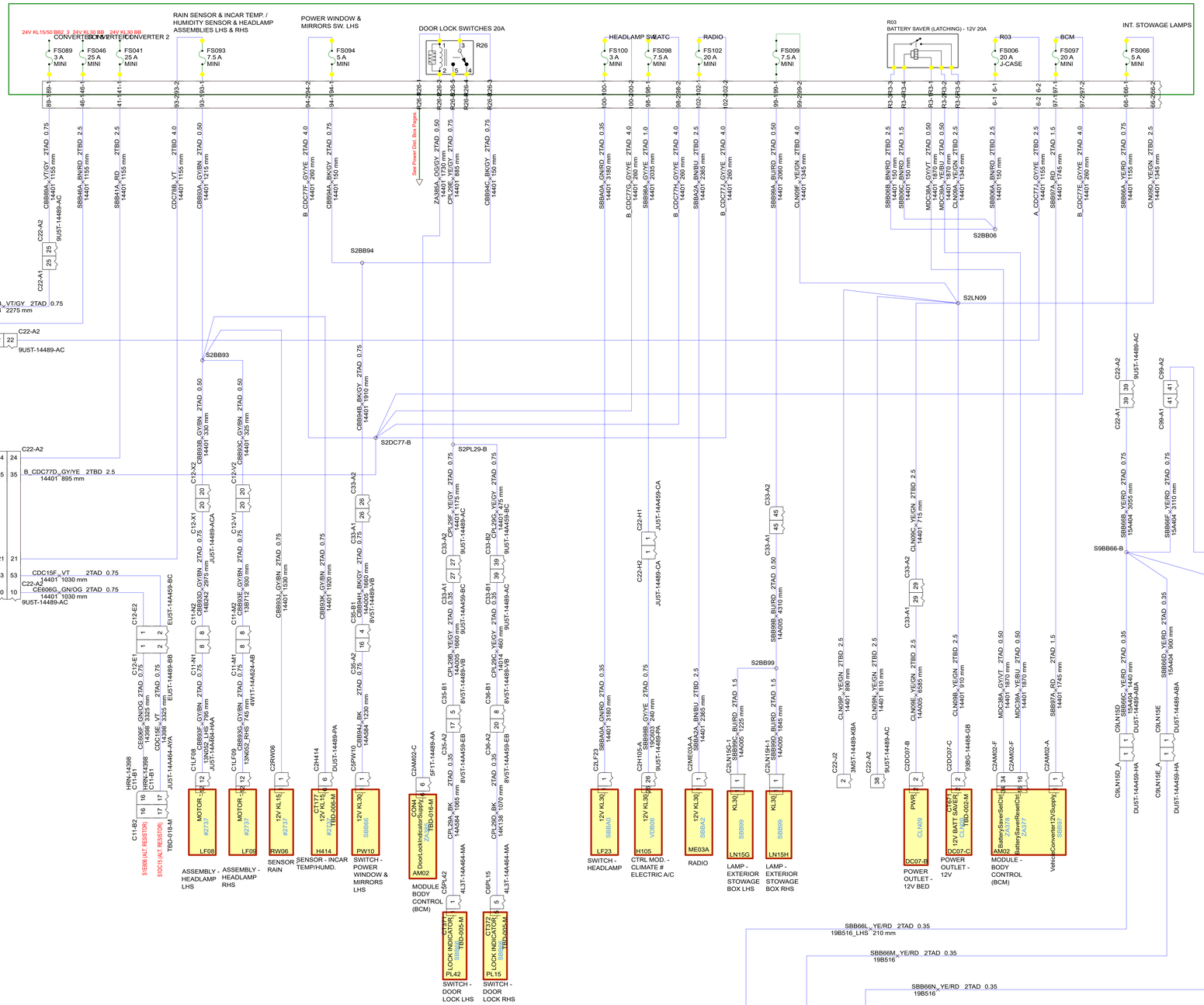

REFERENCE N/A			
PART MUST COMPLY WITH RESTRICTED SUBSTANCE MANAGEMENT STANDARD WSS-M99P9999 A1 TO SAFEGUARD HEALTH SAFETY AND THE ENVIRONMENT			
DRAFTED IN ACCORDANCE WITH FORD MOTOR COMPANY ENGINEERING CAD AND DRAFTING STANDARDS VERSION 27.0		3RD ANGLE PROJ DIMENSIONS ARE IN MILLIMETERS	
CAD TYPE X-E3	CAD LOC.	CAD FILE PHJC46-70C463-A	DTM IS MASTER
OPER NO. N/A	UNIT N/A	DRAWING	SIZE A0
DESIGN fkarade3	DETAIL -----	TITLE: H625 - 2019 LP3 Design 24V / 12V VOLTAGE CONVERTER	SHT 1 OF 1
CHECKED -----	SAFETY MFG USE		
SCALE N/A	DATE 20161129	DIVISION: EESE	
		PLANT: N/A	

PRINTED COPIES ARE UNCONTROLLED

LTRS	REVISIONS		
ORIGINATOR	CHECKER	ENGR APP	MATL APP

H625 2019 LP3 Design
C25.02 ACCESSORY LIGHTING

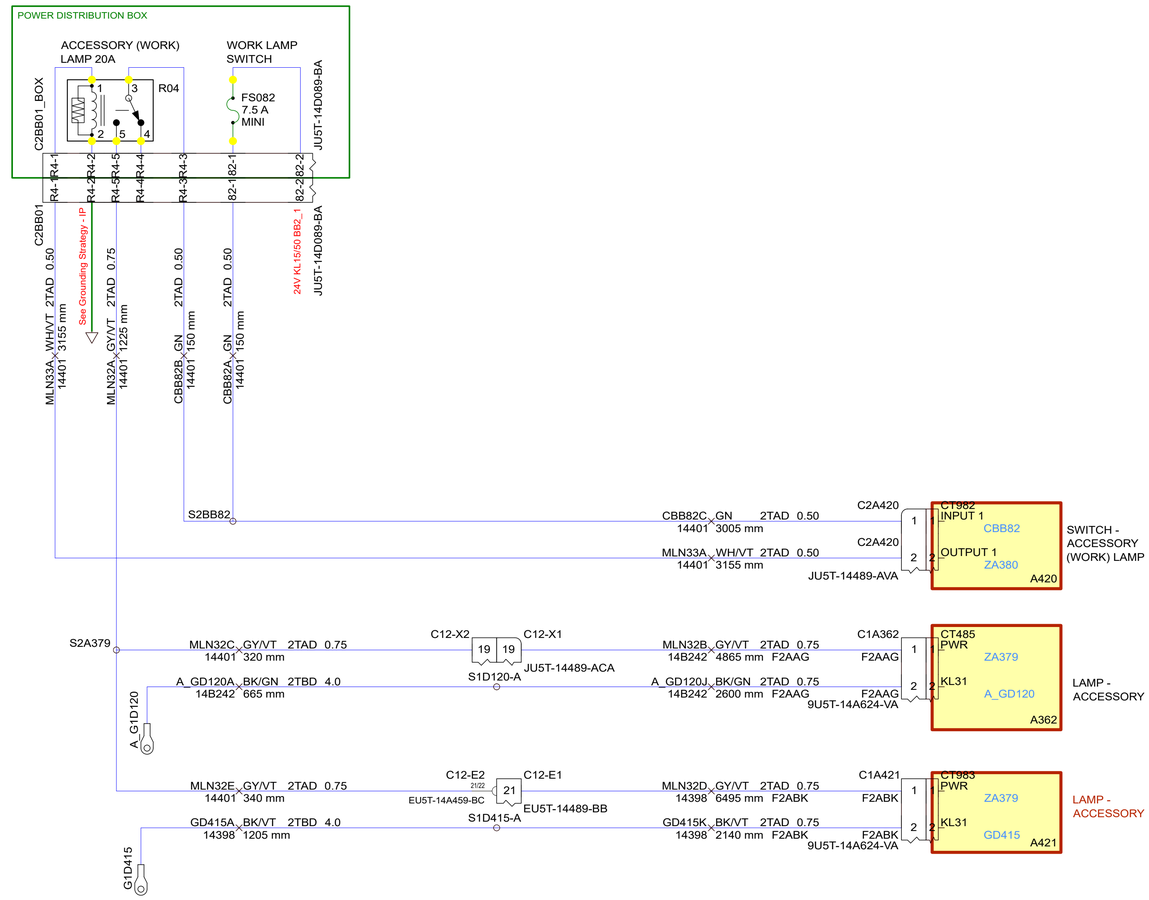

REFERENCE			
PART MUST COMPLY WITH RESTRICTED SUBSTANCE MANAGEMENT STANDARD WSS-M99P9999 A1 TO SAFEGUARD HEALTH SAFETY AND THE ENVIRONMENT			
DRAFTED IN ACCORDANCE WITH FORD MOTOR COMPANY ENGINEERING CAD AND DRAFTING STANDARDS VERSION 27.0		3RD ANGLE PROJ DIMENSIONS ARE IN MILLIMETERS	
CAD TYPE X-E3	CAD LOC. TCE	CAD FILE PHJC46-70C481-A	DTM IS MASTER
OPER NO. N/A	UNIT N/A	DRAWING	SIZE A1
DESIGN sakay	DETAIL -----	TITLE: H625 - 2019 LP3 Design ACCESSORY LIGHTING	SHT 1 OF 1
CHECKED -----	SAFETY MFG USE		
SCALE NTS	DATE 20120101	DIVISION: EESE	
		PLANT: N/A	

Modified By: NYAYLA1
Date Changed: 12/3/2019

H625 2019 LP3 Design
C25.05 POWER TAKE OFF

LTRS	REVISIONS		
ORIGINATOR	CHECKER	ENGR APP	MATL APP

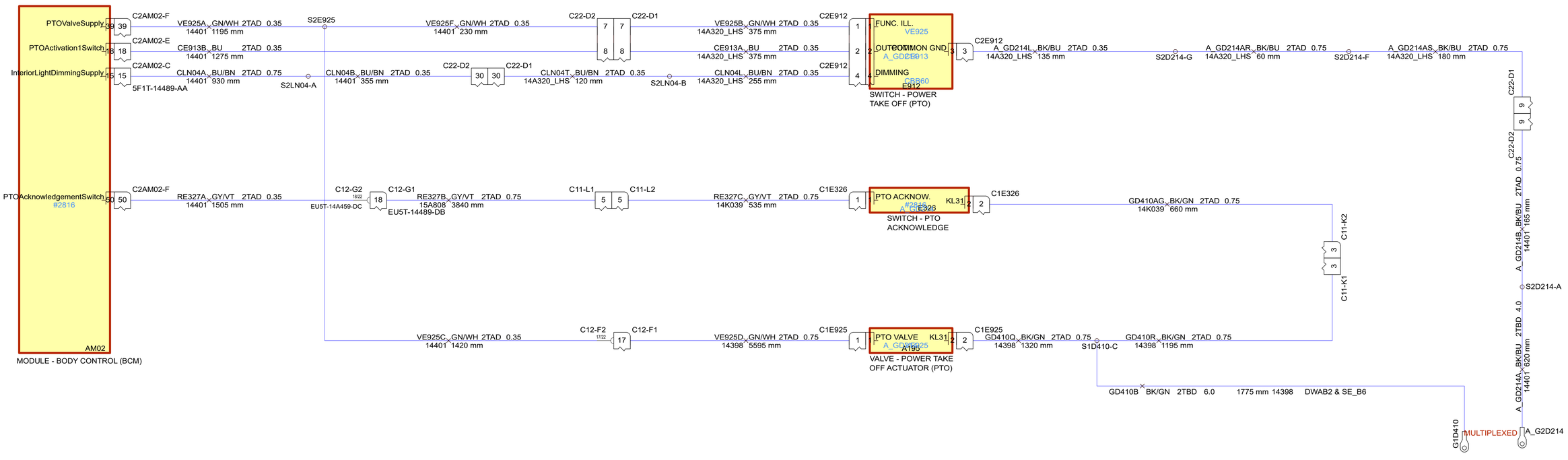

REFERENCE		
PART MUST COMPLY WITH RESTRICTED SUBSTANCE MANAGEMENT STANDARD WSS-M99P9999 A1 TO SAFEGUARD HEALTH SAFETY AND THE ENVIRONMENT		
DRAFTED IN ACCORDANCE WITH FORD MOTOR COMPANY ENGINEERING CAD AND DRAFTING STANDARDS VERSION 27.0		3RD ANGLE PROJ DIMENSIONS ARE IN MILLIMETERS
CAD TYPE X-E3	CAD LOC. TCE	CAD FILE PHJC46-70C484-A DTM IS MASTER
OPER NO. N/A	UNIT N/A	DRAWING SIZE A1
DESIGN agezer1	DETAIL -----	TITLE: H625 - 2019 LP3 Design POWER TAKE OFF SHT 1 OF 1
CHECKED -----	SAFETY MFG USE	
SCALE NTS	DATE 20120101	DIVISION: EESE PLANT: N/A

Modified By: NYAYLA1
Date Changed: 4/28/2019

LTRS	REVISIONS		
ORIGINATOR	CHECKER	ENGR APP	MATL APP

H625 2019 LP3 Design
C25.06 - CABIN TILTING
1.3 CGEA SHEMATIC

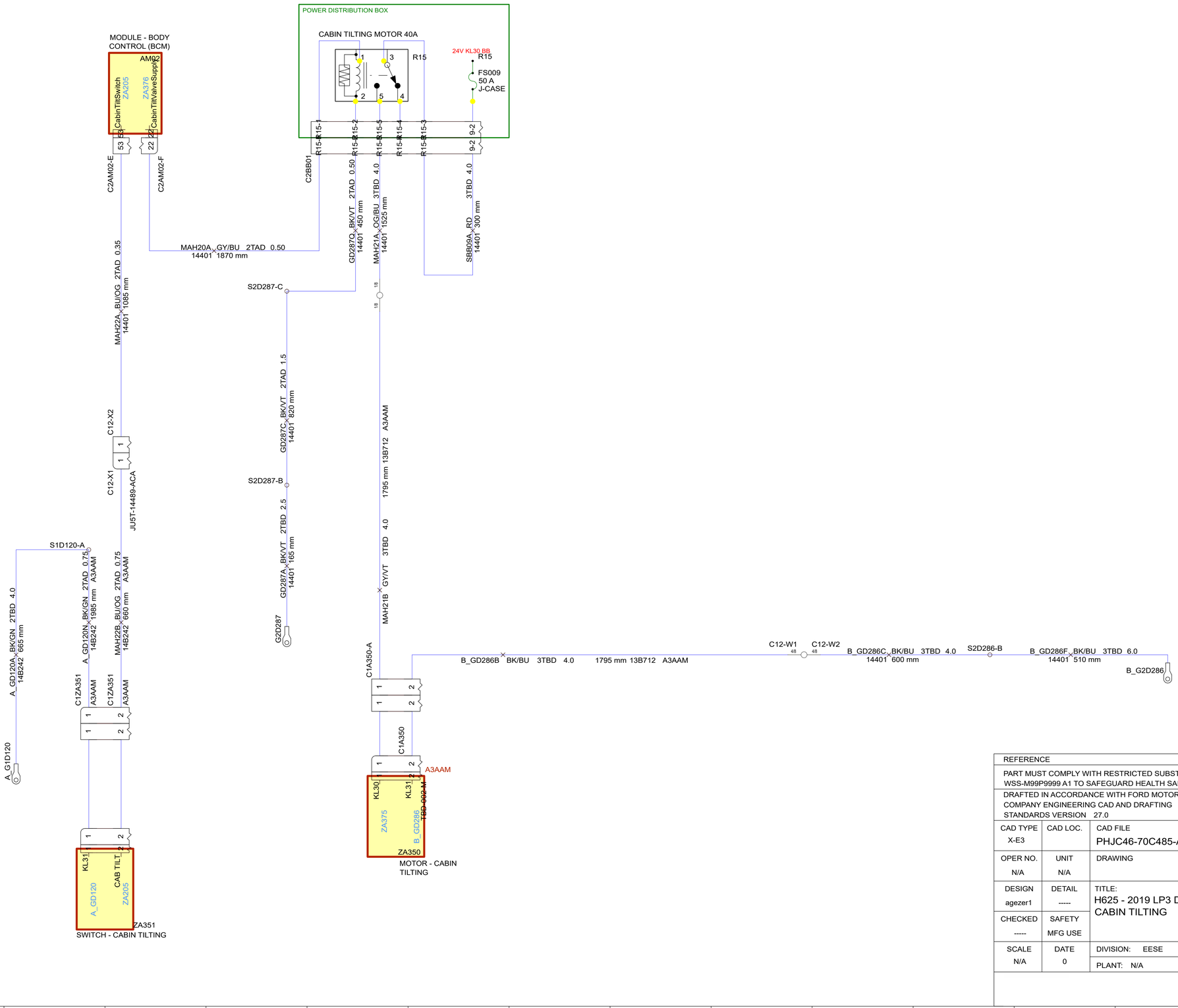

REFERENCE			
PART MUST COMPLY WITH RESTRICTED SUBSTANCE MANAGEMENT STANDARD WSS-M99P9999 A1 TO SAFEGUARD HEALTH SAFETY AND THE ENVIRONMENT			
DRAFTED IN ACCORDANCE WITH FORD MOTOR COMPANY ENGINEERING CAD AND DRAFTING STANDARDS VERSION 27.0			3RD ANGLE PROJ DIMENSIONS ARE IN MILLIMETERS
CAD TYPE X-E3	CAD LOC.	CAD FILE PHJC46-70C485-A	DTM IS MASTER
OPER NO. N/A	UNIT N/A	DRAWING	SIZE A1
DESIGN agezer1	DETAIL -----	TITLE: H625 - 2019 LP3 Design CABIN TILTING	SHT 1 OF 1
CHECKED -----	SAFETY MFG USE		
SCALE N/A	DATE 0	DIVISION: EESE	
		PLANT: N/A	

Modified By: NYAYLA1
Date Changed: 12/3/2019

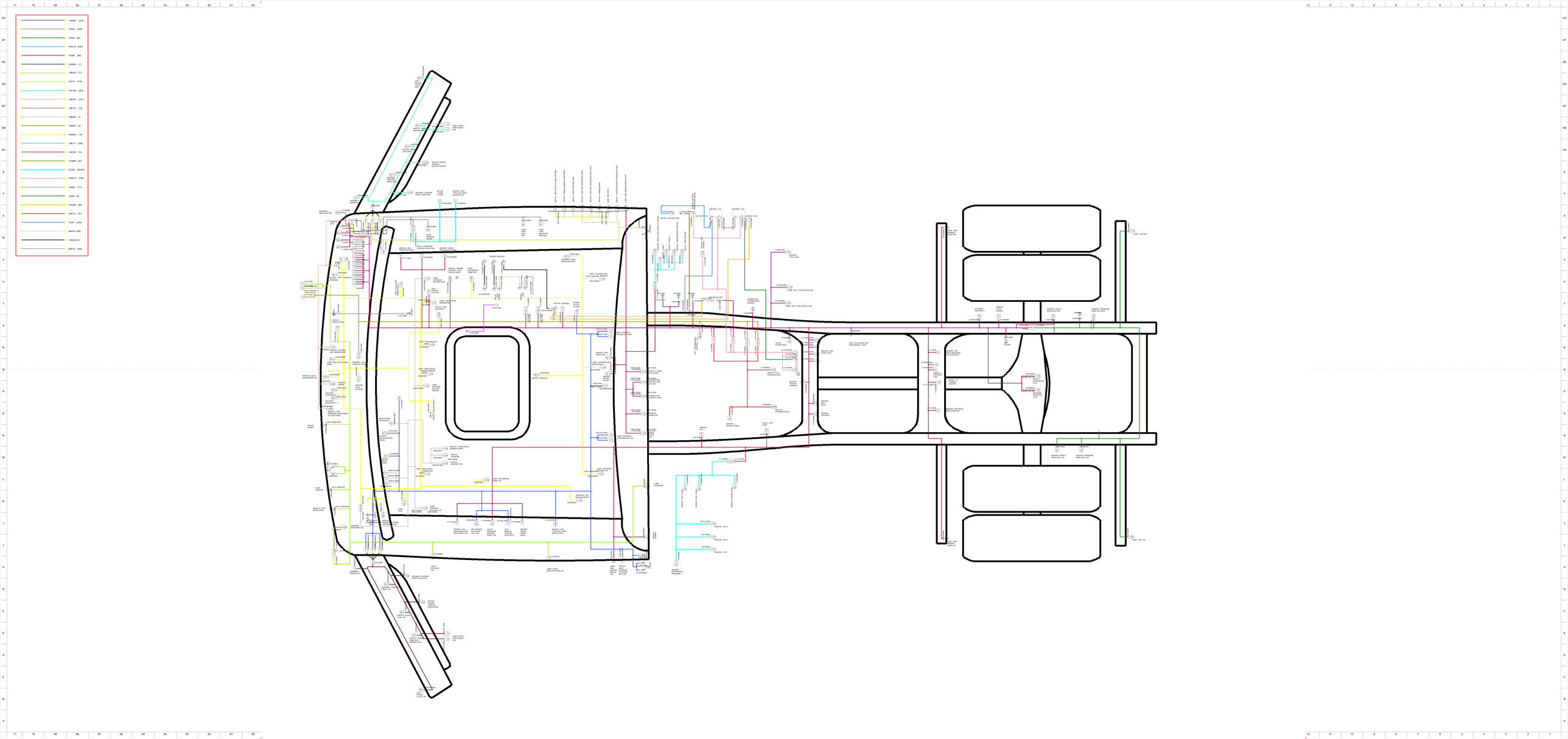

1A4305 (233)
1A303 (209)
1A403 (50)
1AF416 (240)
1A308 (85)
1A5304 (1)
1A6242 (77)
1A014 (134)
1A4108 (200)
138767 (191)
1387712 (12)
1B8594 (7)
1A9202 (4)
1A4404 (10)
1387711 (204)
1A4309 (13)
1A4308 (54)
BLA301-1A5378
1AF413 (183)
1A304 (111)
1A300 (2)
1A4280 (85)
1A4701 (37)
1A301 (239)
BB018 (198)
1A9202 (0)
BB018 (180)

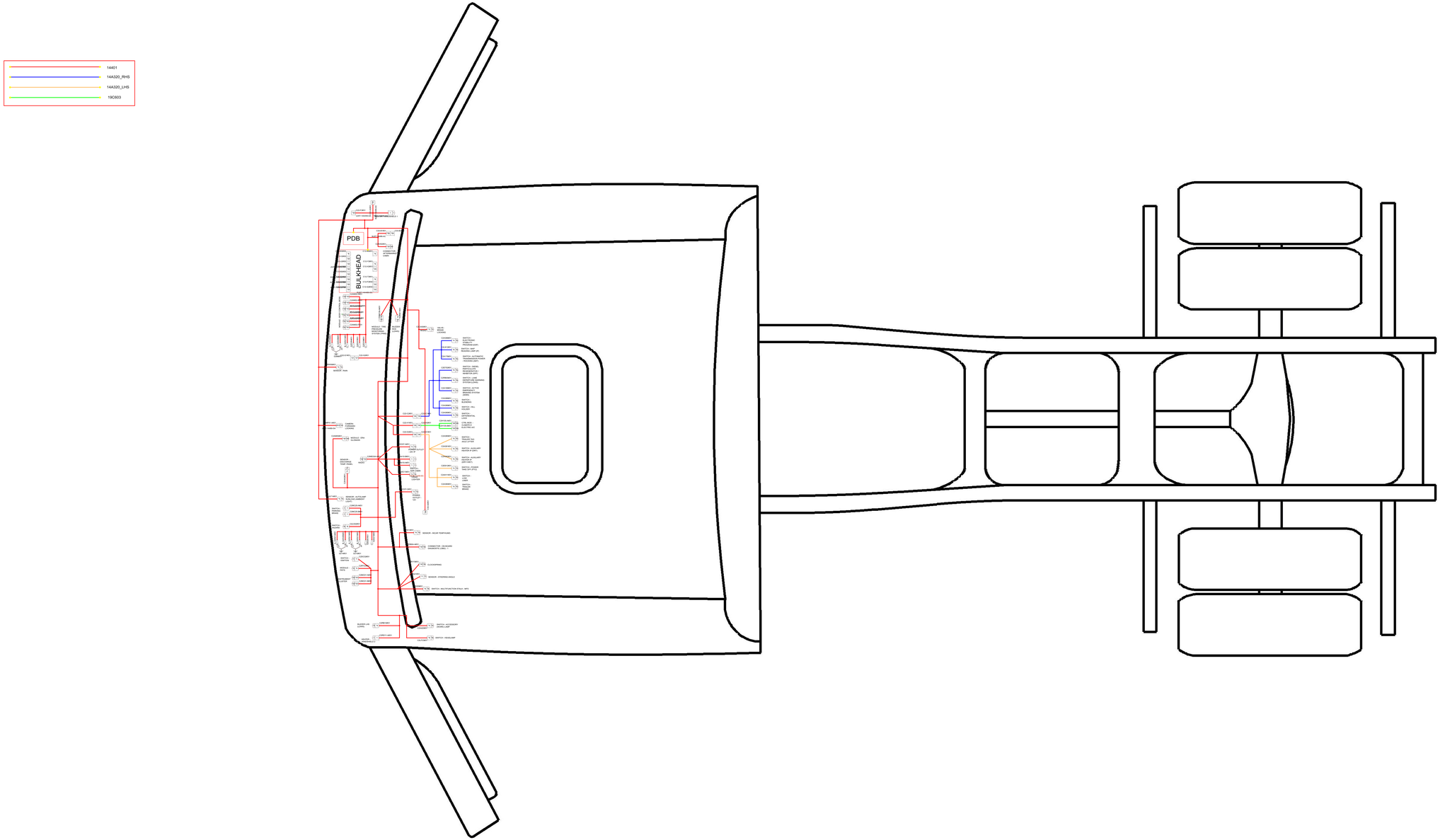
14401
14A320_RHS
14A320_LHS
19C603
PDB
BULKHEAD

LTRS	REVISIONS			
ORIGINATOR	CHECKER	ENGR APP	MATL APP	

H625 2019 LP3 Design
PDB - BACK VIEW

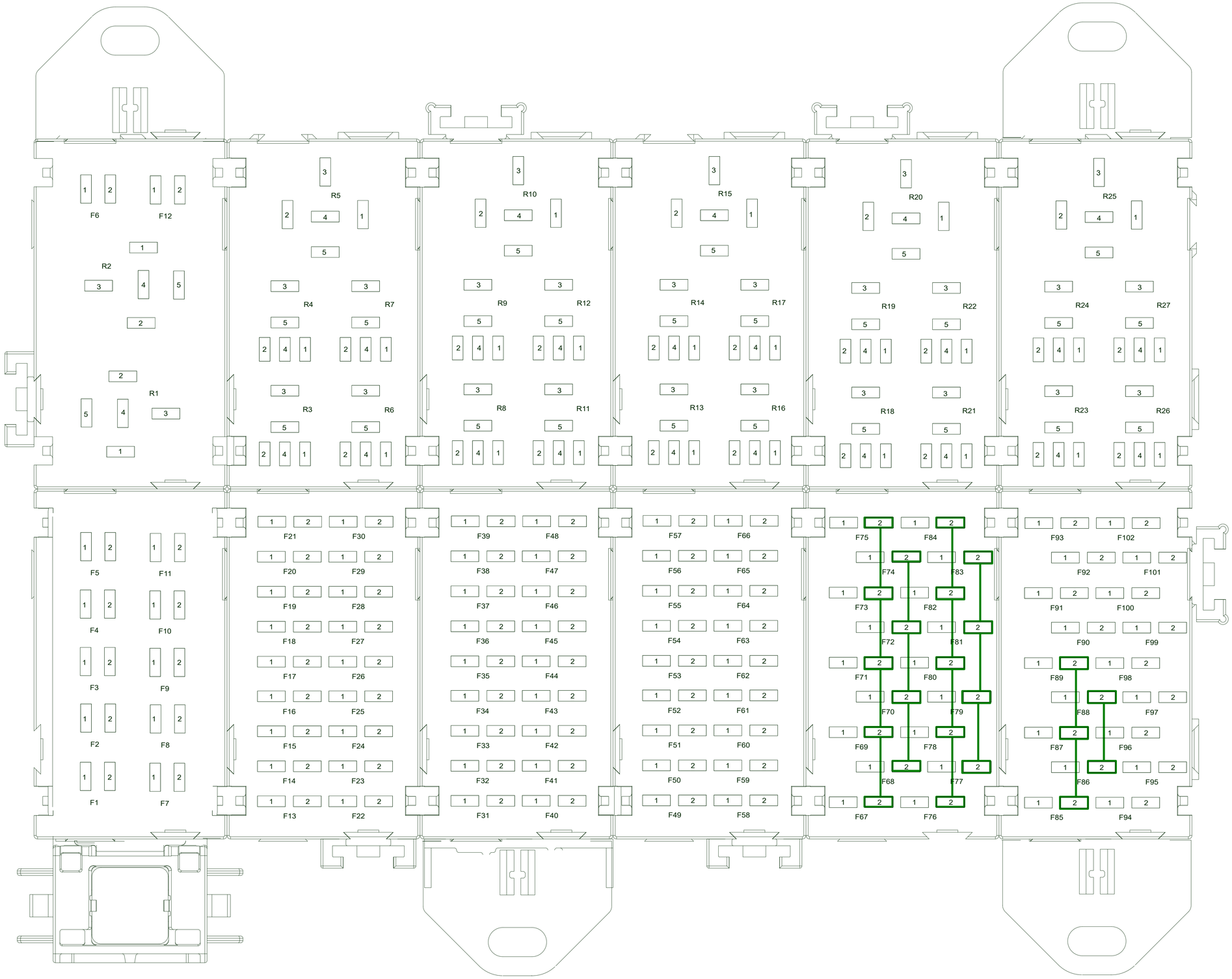

JU5T-14D089-BA

*285*285

REFERENCE			
PART MUST COMPLY WITH RESTRICTED SUBSTANCE MANAGEMENT STANDARD WSS-M99P9999 A1 TO SAFEGUARD HEALTH SAFETY AND THE ENVIRONMENT			
DRAFTED IN ACCORDANCE WITH FORD MOTOR COMPANY ENGINEERING CAD AND DRAFTING STANDARDS VERSION 27.0			3RD ANGLE PROJ DIMENSIONS ARE IN MILLIMETERS
CAD TYPE X-E3	CAD LOC. TCE	CAD FILE PDB_BACKVIEW	DTM IS MASTER
OPER NO. N/A	UNIT N/A	DRAWING	SIZE A1
DESIGN fkarade3	DETAIL -----	TITLE: H625 - 2019 LP3 Design PDB - BACK VIEW	SHT 1 OF 1
CHECKED -----	SAFETY MFG USE		
SCALE NTS	DATE 20120101	DIVISION: EESE	
		PLANT: N/A	

Modified By: ABEKES
Last Changed: 1/28/2019

H625 2019 LP3 Design
PDB - FRONT VIEW

LTRS	REVISIONS		
ORIGINATOR	CHECKER	ENGR APP	MATL APP

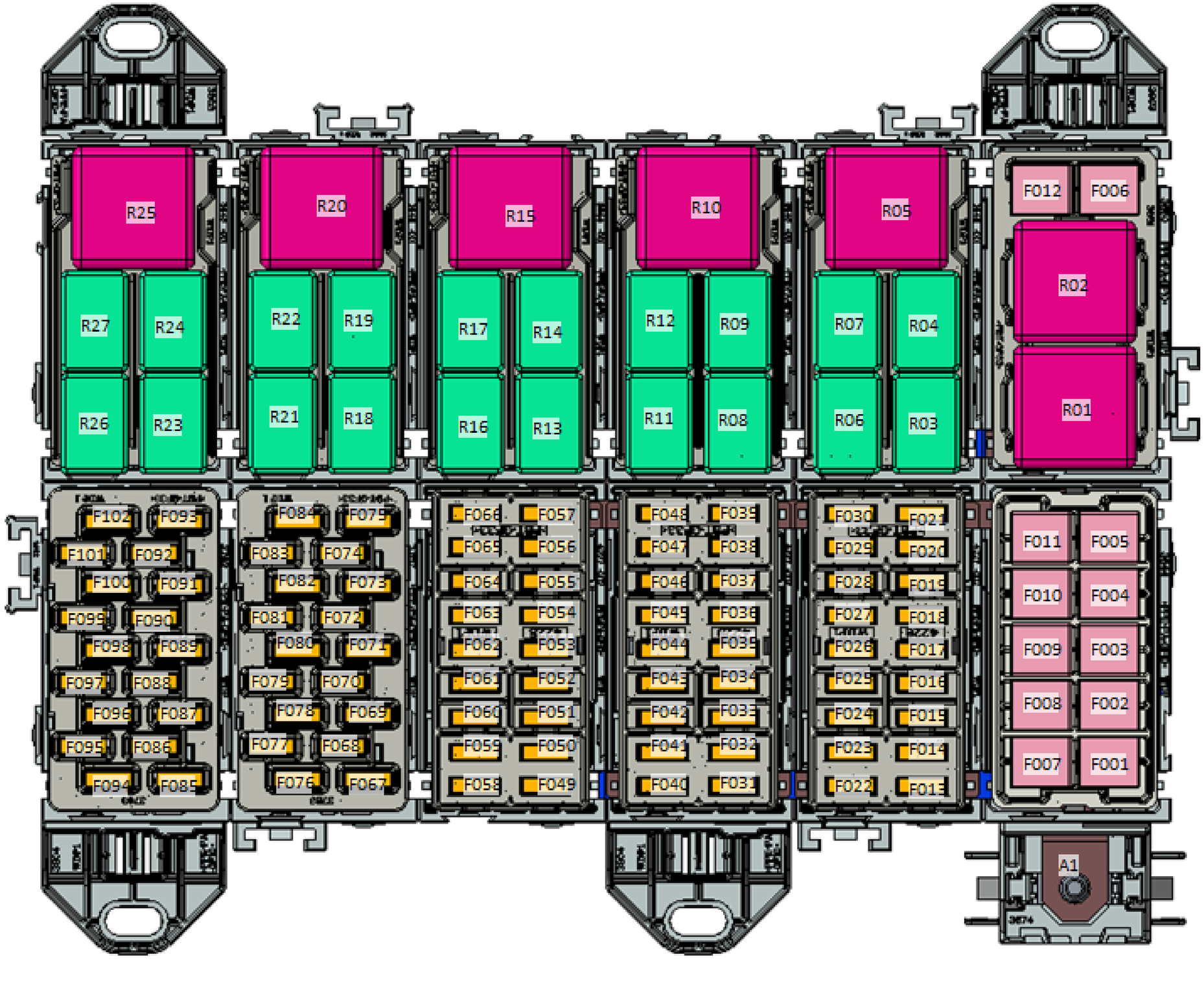

REFERENCE			
PART MUST COMPLY WITH RESTRICTED SUBSTANCE MANAGEMENT STANDARD WSS-M99P9999 A1 TO SAFEGUARD HEALTH SAFETY AND THE ENVIRONMENT			
DRAFTED IN ACCORDANCE WITH FORD MOTOR COMPANY ENGINEERING CAD AND DRAFTING STANDARDS VERSION 27.0			3RD ANGLE PROJ DIMENSIONS ARE IN MILLIMETERS
CAD TYPE X-E3	CAD LOC.	CAD FILE PDB_FRONTVIEW	DTM IS MASTER
OPER NO. N/A	UNIT N/A	DRAWING	SIZE A1
DESIGN fkarade3	DETAIL -----	TITLE: H625 - 2019 LP3 Design PDB - FRONT VIEW	SHT 1 OF 1
CHECKED -----	SAFETY MFG USE		
SCALE N/A	DATE 20171005	DIVISION: EESE	
		PLANT: N/A	

Modified By: AGEZER
Date Changed: 11/12/2019

Перевод с английский - русский - www.onlinedoctranslator.com

LTRS	ПЕРЕСМОТР		
ОРИГИНАТОР	ПРОВЕРКА	АНГЛ ПРИЛОЖЕНИЕ	ПРИЛОЖЕНИЕ МАСЛ

ПЕРЕЧЕНЬ РЕЛЕ И ПРЕДОХРАНИТЕЛЕЙ

ФС001	J-СЛУЧАЙ	30 А	БЛОК УПРАВЛЕНИЯ КОРОБКОЙ ПЕРЕДАЧ KL30
ФС002	J-СЛУЧАЙ	40 А	ОБОГРЕВ ВЕТРОВОГО СТЕКЛА-1
ФС003	J-СЛУЧАЙ	40 А	ОБОГРЕВ ВЕТРОВОГО СТЕКЛА-2
ФС006	J-СЛУЧАЙ	20 А	РОЗЕТКА ПИТАНИЯ 12 В
ФС007	J-СЛУЧАЙ	30 А	МОДУЛЬ - СКОРОСТЬ ВЕНТИЛЯТОРА
ФС009	J-СЛУЧАЙ	50 А	МОТОР НАКЛОНА КАБИНЫ
ФС010	J-СЛУЧАЙ	30 А	24В КЛ30
ФС011	J-СЛУЧАЙ	40 А	РОЗЕТКА 24 В
ФС013	МИНИ ПРЕДОХРАНИТЕЛЬ	20 А	БЛОК УПРАВЛЕНИЯ ДВИГАТЕЛЕМ
ФС014	МИНИ ПРЕДОХРАНИТЕЛЬ	10 А	БЛОК УПРАВЛЕНИЯ КОРОБКОЙ ПЕРЕДАЧ KL30
ФС015	МИНИ ПРЕДОХРАНИТЕЛЬ	7,5 А	ИНТАРДЕР KL30
ФС016	МИНИ ПРЕДОХРАНИТЕЛЬ	15 А	ПАРКОВНЫЕ ОГНИ
ФС017	МИНИ ПРЕДОХРАНИТЕЛЬ	5 А	ТАХОГРАФ KL30
ФС018	МИНИ ПРЕДОХРАНИТЕЛЬ	3 А	КАМЕРА ПЕРЕДНЕГО ОБЗОРА
ФС019	МИНИ ПРЕДОХРАНИТЕЛЬ	7,5 А	ВЫКЛЮЧАТЕЛЬ ЗАМКА ДВЕРИ
ФС020	МИНИ ПРЕДОХРАНИТЕЛЬ	20 А	МОДУЛЬ УПРАВЛЕНИЯ КУЗОВА 24В KL30
ФС021	МИНИ ПРЕДОХРАНИТЕЛЬ	5 А	Э-ВСУ KL30
ФС022	МИНИ ПРЕДОХРАНИТЕЛЬ	20 А	МОДУЛЬ УПРАВЛЕНИЯ КУЗОВА 24В KL30
ФС023	МИНИ ПРЕДОХРАНИТЕЛЬ	10 А	ЗАДНИЕ ФОНАРИ
ФС024	МИНИ ПРЕДОХРАНИТЕЛЬ	7,5 А	ХОЛОДИЛЬНИК
ФС025	МИНИ ПРЕДОХРАНИТЕЛЬ	20 А	МОДУЛЬ УПРАВЛЕНИЯ КУЗОВА 24В KL30
ФС026	МИНИ ПРЕДОХРАНИТЕЛЬ	20 А	РЕЛЕ 12 +
ФС027	МИНИ ПРЕДОХРАНИТЕЛЬ	20 А	НАГРЕВАТЕЛЬ МОКРОГО ТИПА
ФС028	МИНИ ПРЕДОХРАНИТЕЛЬ	10 А	ЗЕРКАЛА С ПОДОГРЕВОМ
ФС029	МИНИ ПРЕДОХРАНИТЕЛЬ	7,5 А	ТРОЙНЫЕ И МАЯЧКОВЫЕ ЛАМПЫ НА КРЫШЕ
ФС030	МИНИ ПРЕДОХРАНИТЕЛЬ	10 А	НАГРЕВАТЕЛЬ СУХОГО ТИПА
ФС031	МИНИ ПРЕДОХРАНИТЕЛЬ	30 А	РАЗЪЕМ ПРИЦЕПА 7-КОНТАКТНЫЙ
ФС032	МИНИ ПРЕДОХРАНИТЕЛЬ	3 А	МОДУЛЬ - ЭРАГЛОНАСС KL30
ФС033	МИНИ ПРЕДОХРАНИТЕЛЬ	20 А	МОДУЛЬ УПРАВЛЕНИЯ КУЗОВА 24В KL30
ФС034	МИНИ ПРЕДОХРАНИТЕЛЬ	20 А	МОДУЛЬ УПРАВЛЕНИЯ КУЗОВА 24В KL30
ФС035	МИНИ ПРЕДОХРАНИТЕЛЬ	20 А	МОДУЛЬ УПРАВЛЕНИЯ КУЗОВА 24В KL30
ФС036	МИНИ ПРЕДОХРАНИТЕЛЬ	20 А	МОДУЛЬ УПРАВЛЕНИЯ КУЗОВА 24В KL30
ФС037	МИНИ ПРЕДОХРАНИТЕЛЬ	3 А	ПЕРЕКЛЮЧАТЕЛЬ MFS
ФС038	МИНИ ПРЕДОХРАНИТЕЛЬ	10 А	БД 1 и 2
ФС039	МИНИ ПРЕДОХРАНИТЕЛЬ	20 А	МОДУЛЬ УПРАВЛЕНИЯ КУЗОВА 24В KL30
ФС040	МИНИ ПРЕДОХРАНИТЕЛЬ	7,5 А	ЖАЛЮЗИ
ФС041	МИНИ ПРЕДОХРАНИТЕЛЬ	25 А	ПРЕОБРАЗОВАТЕЛЬ НАПРЯЖЕНИЯ -2
ФС042	МИНИ ПРЕДОХРАНИТЕЛЬ	5 А	МОДУЛЬ ПРОГНОЗИРУЮЩЕГО КРУИЗ-КОНТРОЛЯ
ФС043	МИНИ ПРЕДОХРАНИТЕЛЬ	15 А	РОГ
ФС044	МИНИ ПРЕДОХРАНИТЕЛЬ	15 А	ЭБС КЛ30
ФС045	МИНИ ПРЕДОХРАНИТЕЛЬ	3 А	ПЕРЕКЛЮЧАТЕЛИ
ФС046	МИНИ ПРЕДОХРАНИТЕЛЬ	25 А	ПРЕОБРАЗОВАТЕЛЬ НАПРЯЖЕНИЯ -1 КЛ30
ФС047	МИНИ ПРЕДОХРАНИТЕЛЬ	15 А	МОДУЛЬ DENOX И НАГРЕВАТЕЛЬ МОЧЕВИНЫ
ФС048	МИНИ ПРЕДОХРАНИТЕЛЬ	20 А	РАЗЪЕМЫ ДЛЯ ПОСЛЕПРОДАЖИ
ФС050	МИНИ ПРЕДОХРАНИТЕЛЬ	20 А	РОЗЕТКА ПИТАНИЯ 24 В IP
ФС052	МИНИ ПРЕДОХРАНИТЕЛЬ	20 А	AFTERMARKET CON УПРАВЛЕНИЕ КАБИНОЙ И АВТОМОБИЛЕМ KL30
ФС053	МИНИ ПРЕДОХРАНИТЕЛЬ	15 А	ЗАЖИГАЛКА
ФС054	МИНИ ПРЕДОХРАНИТЕЛЬ	5 А	СКДП
ФС055	МИНИ ПРЕДОХРАНИТЕЛЬ	5 А	ЗАМОК ЗАЖИГАНИЯ
ФС056	МИНИ ПРЕДОХРАНИТЕЛЬ	10 А	КОМБИНАЦИЯ ПРИБОРОВ KL30
ФС058	МИНИ ПРЕДОХРАНИТЕЛЬ	3 А	ДВИГАТЕЛЬ ОБ/МИН
ФС059	МИНИ ПРЕДОХРАНИТЕЛЬ	10 А	РАЗЪЕМ ПРИЦЕПА 15-КОНТАКТНЫЙ
ФС060	МИНИ ПРЕДОХРАНИТЕЛЬ	5 А	ПАРКОВНЫЕ ОГНИ
ФС061	ДИОД	1 А	ВХОД ПРОБУЖДЕНИЯ ПЕРЕКЛЮЧАТЕЛЬ ЛЮКА НА КРЫШЕ ОНС
ФС062	ДИОД	1 А	WAKE UP INPUT ЛЮК НА КРЫШЕ ПЕРЕКЛЮЧАТЕЛЬ КРОВАТИ
ФС063	ДИОД	1 А	ЛАМПА ДЛЯ ПРОБУЖДЕНИЯ
ФС064	МИНИ ПРЕДОХРАНИТЕЛЬ	3 А	ТАХОГРАФ
ФС066	МИНИ ПРЕДОХРАНИТЕЛЬ	5 А	СВЕТИЛЬНИКИ ВНУТРЕННЕГО ЯЩИКА
ФС067	МИНИ ПРЕДОХРАНИТЕЛЬ	7,5 А	ЭБС КЛ15
ФС068	МИНИ ПРЕДОХРАНИТЕЛЬ	3 А	КОМБИНАЦИЯ ПРИБОРОВ KL15
ФС069	МИНИ ПРЕДОХРАНИТЕЛЬ	3 А	Э-ВСУ KL15
ФС070	МИНИ ПРЕДОХРАНИТЕЛЬ	7,5 А	ИНТАРДЕР KL15
ФС071	МИНИ ПРЕДОХРАНИТЕЛЬ	5 А	ТАХОГРАФ KL15
ФС072	МИНИ ПРЕДОХРАНИТЕЛЬ	3 А	ЗУММЕР LDWS
ФС073	МИНИ ПРЕДОХРАНИТЕЛЬ	7,5 А	РАДАР И КАМЕРА И PCCM KL15
ФС074	МИНИ ПРЕДОХРАНИТЕЛЬ	7,5 А	БЛОК УПРАВЛЕНИЯ КОРОБКОЙ ПЕРЕДАЧ KL15
ФС075	МИНИ ПРЕДОХРАНИТЕЛЬ	5 А	ЭБУ КЛ15
ФС076	МИНИ ПРЕДОХРАНИТЕЛЬ	3 А	ECAS RCU
ФС077	МИНИ ПРЕДОХРАНИТЕЛЬ	10 А	СИДЕНЬЕ С ПОДОГРЕВОМ
ФС079	МИНИ ПРЕДОХРАНИТЕЛЬ	3 А	СТОП-ЛАМПЫ
ФС080	МИНИ ПРЕДОХРАНИТЕЛЬ	15 А	ПОСЛЕПРОДАЖНЫЙ РЫНОК И УПРАВЛЕНИЕ АВТОМОБИЛЕМ KL15
ФС081	МИНИ ПРЕДОХРАНИТЕЛЬ	3 А	МОДУЛЬ - ЭРАГЛОНАСС KL15
ФС082	МИНИ ПРЕДОХРАНИТЕЛЬ	7,5 А	РАБОЧИЕ ЛАМПЫ KL15
ФС083	МИНИ ПРЕДОХРАНИТЕЛЬ	3 А	ПЕРЕКЛЮЧАТЕЛЬ MFS KL15
ФС084	МИНИ ПРЕДОХРАНИТЕЛЬ	5 А	KL15 ВЫКЛЮЧАТЕЛИ
ФС085	МИНИ ПРЕДОХРАНИТЕЛЬ	10 А	ЗАПАСНЫЕ ЛАМПЫ
ФС087	МИНИ ПРЕДОХРАНИТЕЛЬ	20 А	ПОДОГРЕВАТЕЛЬ ФИЛЬТРА ТОПЛИВА
ФС088	МИНИ ПРЕДОХРАНИТЕЛЬ	7,5 А	РАЗЪЕМЫ 7-PIN KL15
ФС089	МИНИ ПРЕДОХРАНИТЕЛЬ	3 А	ПРЕОБРАЗОВАТЕЛЬ НАПРЯЖЕНИЯ 1 И 2 KL15
ФС090	МИНИ ПРЕДОХРАНИТЕЛЬ	10 А	ДАТЧИК NOX 1 И 2
ФС091	МИНИ ПРЕДОХРАНИТЕЛЬ	7,5 А	ДАТЧИК УРОВНЯ-КАЧЕСТВА МОЧЕВИНЫ
ФС092	МИНИ ПРЕДОХРАНИТЕЛЬ	15 А	КЛАПАН EGR И ТУРБО ПРИВОД
ФС093	МИНИ ПРЕДОХРАНИТЕЛЬ	7,5 А	ВЫРАВНИВАНИЕ И ДАТЧИК ДОЖДЯ И ВНУТРЕННЯЯ ТЕМПЕРАТУРА HUM.
ФС094	МИНИ ПРЕДОХРАНИТЕЛЬ	5 А	ВЫКЛЮЧАТЕЛЬ - ЭЛЕКТРОСТЕКЛОПОДЪЕМНИК
ФС097	МИНИ ПРЕДОХРАНИТЕЛЬ	20 А	МОДУЛЬ УПРАВЛЕНИЯ КУЗОВА 12В KL30
ФС098	МИНИ ПРЕДОХРАНИТЕЛЬ	7,5 А	БЛОК КЛИМАТ-КОНТРОЛЯ
ФС099	МИНИ ПРЕДОХРАНИТЕЛЬ	7,5 А	НАРУЖНЫЕ ВЕЩИ ЛАМПЫ
ФС100	МИНИ ПРЕДОХРАНИТЕЛЬ	3 А	ВЫКЛЮЧАТЕЛЬ ФАР
ФС101	МИНИ ПРЕДОХРАНИТЕЛЬ	7,5 А	КАТУШКА РЕЛЕ ДВИГАТЕЛЯ СИГНАЛА И ВЕНТИЛЯТОРА +
ФС102	МИНИ ПРЕДОХРАНИТЕЛЬ	20 А	РАДИО
R01	МИНИ-РЕЛЕ	24В 40А	КЛ15-1
R02	МИНИ-РЕЛЕ	24В 40А	КЛ15-2
R03	МИКРО РЕЛЕ	12В 20А	ЗАЩЕЛКА АККУМУЛЯТОРА
R04	МИКРО РЕЛЕ	24В 20А	РАБОЧИЕ ЛАМПЫ
R05	МИНИ-РЕЛЕ	24В 40А	ЗАПУСК / ПРИНАДЛЕЖНОСТИ
R06	МИКРО РЕЛЕ	24В 20А	СОЛНЕЧНАЯ ЖАЛЮЗИ МОТОР ВВЕРХ
R07	МИКРО РЕЛЕ	24В 20А	ОСТАНОВКА ДВИГАТЕЛЯ
R08	МИКРО РЕЛЕ	24В 20А	РОГ
R09	МИКРО РЕЛЕ	24В 20А	МОДУЛЬ DENOX И НАГРЕВАТЕЛЬ МОЧЕВИНЫ
R10	МИНИ-РЕЛЕ	24В 40А	ДВИГАТЕЛЬ ВЕНТИЛЯТОРА
R11	МИКРО РЕЛЕ	24В 20А	РЕЗЕРВНЫЕ ЛАМПЫ И ЗУММЕРЫ
R12	МИКРО РЕЛЕ	24В 20А	УРОВЕНЬ NOX И МОЧЕВИНЫ, КЛАПАН EGR И ТУРБО-АКТ
R13	МИКРО РЕЛЕ		ЗАПАСНОЙ
R14	МИКРО РЕЛЕ		ЗАПАСНОЙ
P15	МИНИ-РЕЛЕ	24В 40А	МОТОР НАКЛОНА КАБИНЫ
P16	МИКРО РЕЛЕ		ЗАПАСНОЙ
P17	МИКРО РЕЛЕ	24В 20А	СТОП-ЛАМПЫ
P18	МИКРО РЕЛЕ		ЗАПАСНОЙ
P19	МИКРО РЕЛЕ	24В 20А	ПАРКОВНЫЕ ОГНИ
20 р.	МИНИ-РЕЛЕ	24В 40А	ВЕТРОВОЕ СТЕКЛО С ПОДОГРЕВОМ 1
R21	МИКРО РЕЛЕ	24В 20А	ТРОЙНЫЕ ЛАМПЫ НА КРЫШЕ
P22	МИКРО РЕЛЕ		ЗАПАСНОЙ
P23	МИКРО РЕЛЕ	24В 20А	МАЯК НА КРЫШЕ
P24	МИКРО РЕЛЕ	24В 20А	ЗЕРКАЛА С ПОДОГРЕВОМ
P25	МИНИ-РЕЛЕ	24В 40А	ВЕТРОВОЕ СТЕКЛО С ПОДОГРЕВОМ 2
P26	МИКРО РЕЛЕ	24В 20А	ВЫКЛЮЧАТЕЛИ ЗАМКА ДВЕРИ
P27	МИКРО РЕЛЕ	24В 20А	МОТОР СОЛНЕЧНОЙ ЖАЛЮЗИ ВНИЗ

ССЫЛКА Н/Д

ЧАСТЬ ДОЛЖНА СООТВЕТСТВОВАТЬ СТАНДАРТУ ОБРАЩЕНИЯ С ОГРАНИЧЕННЫМИ ВЕЩЕСТВАМИ WSS-M99P9999 A1 ДЛЯ ОБЕСПЕЧЕНИЯ БЕЗОПАСНОСТИ ЗДОРОВЬЯ И ОКРУЖАЮЩЕЙ СРЕДЫ

СОСТАВЛЕНО В СООТВЕТСТВИИ С ИНЖЕНЕРНЫМИ САПР КОМПАНИИ FORD MOTOR COMPANY ВЕРСИЯ СТАНДАРТОВ ПРОЕКТИРОВАНИЯ 00.0

3-Й УГОЛ ПРОЕКТ РАЗМЕРЫ В МИЛЛИМЕТРАХ

ТИП САПР	CAD ЛОК.	САПР-ФАЙЛ	ДТМ
X-E3		РЕЛЕ И ПРЕДОХРАНИТЕЛИ	МАСТЕР
НОМЕР ОПЕР.	ЕДИНИЦА	РИСУНОК	РАЗМЕР
Н/Д	Н/Д		A0
ДИЗАЙН	ДЕТАЛИ	МАТЕРИАЛ	ЦТ 1
AGEZER1	.....	H625 - 2019 Дизайн LP3	ИЗ 1
ПРОВЕРЕНО	БЕЗОПАСНОСТЬ		
.....	ИСПОЛЬЗОВАНИЕ МАГ		
ШКАЛА	ДАТА	РАЗДЕЛЕНИЕ: EESE	
Н/Д	20190315	ЗАВОД: Н/Д	

ПЕЧАТНЫЕ КОПИИ НЕ КОНТРОЛИРУЮТСЯ

LTRS	ПЕРЕСМОТР		
ОРИГИНАТОР	ПРОВЕРКА	АНГР.ПРИЛОЖЕНИЕ	ПРИЛОЖЕНИЕ МАТЛ

КОД ОПЦИИ ОПИСАНИЕ

Обуздать	Описание
A3AAK	КАБИНА-ГИДРАВЛИЧЕСКИЙ НАКЛОН
A3AAM	ЭЛЕКТРИЧЕСКИЙ НАКЛОН КАБИНЫ
АГКАА	МЕНЕЕ ОПАСНЫЙ ХОРОШИЙ TRNSPRT-ADR
АГКАБ	ОПАСНО УДОБНАЯ ТРАНСПОРТИРОВКА - ADR
B3MAB	ЭЛЕКТРИЧЕСКИЙ ОБОГРЕВ ВЕТРОВОГО СТЕКЛА
CLFB3	ПЕРЕДНИЙ БАМПЕР-ДЛИННЫЙ
ДГ2АЛ	ПЛАСТИКОВЫЙ БАК ЭМИС-МОЧЕВИНЫ-55Л
ДГ2АМ	ПЛАСТИКОВЫЙ БАК ЭМИС-МОЧЕВИНЫ-78Л
ДГАА7	ВЫБРОСЫ ЕВРО 6
ДГАБ3	HVY DTY TRUCK EURO 5 RQMTS
DWAB2	МЕХАНИЧЕСКАЯ ПОДВЕСКА
DWAB9	ПНЕВМАТИЧЕСКАЯ ПОДВЕСКА (C2AS)
ДВАБН	ПНЕВМАТИЧЕСКАЯ ПОДВЕСКА
EN JH	" 12,7 л OHC C/RAIL DSL ECOTORQ B "
F2AAG	SNG HOR SS MUFF ICC/PIPE-LH
F2ABK	SING HORZ MUF/DU VERT PIPE-OF
ФБААЛ	ВСЕ КОЛЕСНЫЕ БАРАБАННЫЕ ТОРМОЗА
ФБАББ	НЕВЕНТИЛЯЦИОННЫЕ ДИСКОВЫЕ ТОРМОЗА
ФБФАА	МЕНЬШЕ СИСТЕМЫ СМЯГЧЕНИЯ СТОЛКНОВЕНИЙ
FBFAH	ПРЕДОТВРАЩЕНИЕ СТОЛКНОВЕНИЙ INTEL EMER BRK
FD2AA	МЕНЬШЕ ЗАМЕДЛИТЕЛЬ/ИНТАРДЕР
FD2AB	ГИДРАВЛИЧЕСКИЙ ЗАМЕДЛИТЕЛЬ
ГТДАЖ	КОНТРОЛЬ СКОРОСТИ И ASLD
ГТДАМ	АДАПТИВНОЕ УПРАВЛЕНИЕ SPD И ASLD
ГТДАР	СКОРОСТЬ CNT, ASLD, PRDICT PTRAIN
ГТДАС	ADP SPD CNT, ASLD, PRDICT PTRAIN
ГЖДАА	МЕНЬШЕ ДОПОЛНИТЕЛЬНОГО НАГРЕВАТЕЛЯ ГОРЯЧЕЙ ВОДЫ
ГЖДАЭ	ДОПОЛНИТЕЛЬНЫЙ НАГРЕВАТЕЛЬ ГОРЯЧЕЙ ВОДЫ-ВЛАЖНОГО ТИПА
ГЖАБ	ПАРКОВОЕ ОТОПЛЕНИЕ
HJCAB	МОНИТОР НАКАЧИВАНИЯ ШИН
HJCAB	МОНИТОР НАКАЧИВАНИЯ ШИН
HKSAA	МЕНЬШЕ СРОЧНОЙ ПОМОЩИ
HKSAC	AECS SMS/ROLL DETECT 2G И 3G
HTABJ	АККУМУЛЯТОР 225 Ач
ИДБАКС	4 ДИНАМИКА ПЕРЕДН./2 ДИНАМИКА ЗАДН.
JЗВАЕ	YELL LMP110-КРЫША ПЕРЕДНЯЯ/ЛЕВАЯ-ЗАДНЯЯ/ПРАВАЯ
JВРАН	ГАБАРИТЫ НА КРЫШЕ - ТРОЙНЫЕ
ЮВ B6	ТРАКТОР СЕРИИ 18
ЮВ C4	18 СЕРИЯ НИЗКИЙ ЛАЙНЕР
ВСПАК	ИЗРАИЛЬ

ССЫЛКА

ЧАСТЬ ДОЛЖНА СООТВЕТСТВОВАТЬ СТАНДАРТУ ОБРАЩЕНИЯ С ОГРАНИЧЕННЫМИ ВЕЩЕСТВАМИ WSS-M99P9999 A1 ДЛЯ ОБЕСПЕЧЕНИЯ БЕЗОПАСНОСТИ ЗДОРОВЬЯ И ОКРУЖАЮЩЕЙ СРЕДЫ

СОСТАВЛЕНО В СООТВЕТСТВИИ С ИНЖЕНЕРНЫМИ САПР КОМПАНИИ FORD MOTOR COMPANY ВЕРСИЯ СТАНДАРТОВ ПРОЕКТИРОВАНИЯ 27,0

3-Й УГОЛ ПРОЕКТ
РАЗМЕРЫ
В МИЛЛИМЕТРАХ

ТИП САПР	CAD ЛОК.	САПР-ФАЙЛ	ДТМ
X-E3		OPTION_CODE_DESCRIPTION	МАСТЕР
НОМЕР ОПЕР. Н/Д	ЕДИНИЦА Н/Д	РИСУНОК	РАЗМЕР A1
ДИЗАЙН AGEZER1	ДЕТАЛИ -----	ЗАГОЛОВОК: H625 - 2019 Дизайн LP3	ШТ 1 ИЗ 1
ПРОВЕРЕНО -----	БЕЗОПАСНОСТЬ ИСПОЛЬЗОВАНИЕ МИГ		
ШКАЛА Н/Д	ДАТА 29032019	РАЗДЕЛЕНИЕ: EESE	
		РАСТЕНИЕ: Н/Д	

Изменено: AGEZER1
Дата изменения: 22.11.2019

LTRS	REVISIONS		
ORIGINATOR	CHECKER	ENGR APP	MATL APP

RELAYS & FUSES LIST

FS001	J-CASE	30 A	TRANSMISSION CONTROL UNIT KL30
FS002	J-CASE	40 A	HEATED WINDSHIELD-1
FS003	J-CASE	40 A	HEATED WINDSHIELD-2
FS006	J-CASE	20 A	12V POWER OUTLET
FS007	J-CASE	30 A	MODULE - BLOWER SPEED
FS009	J-CASE	50 A	CABIN TILTING MOTOR
FS010	J-CASE	30 A	24V KL30
FS011	J-CASE	40 A	24V POWER OUTLET
FS013	MINI FUSE	20 A	ENGINE CONTROL UNIT
FS014	MINI FUSE	10 A	TRANSMISSION CONTROL UNIT KL30
FS015	MINI FUSE	7.5 A	INTARDER KL30
FS016	MINI FUSE	15 A	PARK LIGHTS
FS017	MINI FUSE	5 A	TACHOGRAPH KL30
FS018	MINI FUSE	3 A	FORWARD LOOKING CAMERA
FS019	MINI FUSE	7.5 A	DOOR LOCK SWITCH
FS020	MINI FUSE	20 A	BODY CONTROL MODULE 24V KL30
FS021	MINI FUSE	5 A	E-APU KL30
FS022	MINI FUSE	20 A	BODY CONTROL MODULE 24V KL30
FS023	MINI FUSE	10 A	TAIL LAMPS
FS024	MINI FUSE	7.5 A	REFRIGERATOR
FS025	MINI FUSE	20 A	BODY CONTROL MODULE 24V KL30
FS026	MINI FUSE	20 A	RELAY 12 +
FS027	MINI FUSE	20 A	WET TYPE HEATER
FS028	MINI FUSE	10 A	HEATED MIRRORS
FS029	MINI FUSE	7.5 A	TRIPLE & BEACON ROOF LAMPS
FS030	MINI FUSE	10 A	DRY TYPE HEATER
FS031	MINI FUSE	30 A	TRAILER CONNECTOR 7-PIN
FS032	MINI FUSE	3 A	MODULE - ERAGLONASS KL30
FS033	MINI FUSE	20 A	BODY CONTROL MODULE 24V KL30
FS034	MINI FUSE	20 A	BODY CONTROL MODULE 24V KL30
FS035	MINI FUSE	20 A	BODY CONTROL MODULE 24V KL30
FS036	MINI FUSE	20 A	BODY CONTROL MODULE 24V KL30
FS037	MINI FUSE	3 A	MFS SWITCH
FS038	MINI FUSE	10 A	OBD 1 & 2
FS039	MINI FUSE	20 A	BODY CONTROL MODULE 24V KL30
FS040	MINI FUSE	7.5 A	SUNBLIND
FS041	MINI FUSE	25 A	VOLTAGE CONVERTER -2
FS042	MINI FUSE	5 A	PREDICTIVE CRUISE CONTROL MODULE
FS043	MINI FUSE	15 A	HORN
FS044	MINI FUSE	15 A	EBS KL30
FS045	MINI FUSE	3 A	SWITCHES
FS046	MINI FUSE	25 A	VOLTAGE CONVERTER -1 KL30
FS047	MINI FUSE	15 A	DENOX MODULE & UREA HEATER
FS048	MINI FUSE	20 A	AFTERMARKET CONNECTORS
FS050	MINI FUSE	20 A	POWER OUTLET 24V IP
FS052	MINI FUSE	20 A	AFTERMARKET CON CABIN & FLEET MANAGMENT KL30
FS053	MINI FUSE	15 A	CIGAR LIGHTER
FS054	MINI FUSE	5 A	TPMS
FS055	MINI FUSE	5 A	IGNITION SWITCH
FS056	MINI FUSE	10 A	INSTRUMENT CLUSTER KL30
FS058	MINI FUSE	3 A	MOTOR RPM
FS059	MINI FUSE	10 A	TRAILER CONNECTOR 15-PIN
FS060	MINI FUSE	5 A	PARK LIGHTS
FS061	DIODE	1 A	WAKE UP INPUT SUNROOF SWITCH OHC
FS062	DIODE	1 A	WAKE UP INPUT SUNROOF SWITCH BED
FS063	DIODE	1 A	WAKE UP INPUT BED AREA LAMP
FS064	MINI FUSE	3 A	TACHOGRAPH
FS066	MINI FUSE	5 A	INTERIOR STOWAGE BOX LAMPS
FS067	MINI FUSE	7.5 A	EBS KL15
FS068	MINI FUSE	3 A	INSTRUMENT CLUSTER KL15
FS069	MINI FUSE	3 A	E-APU KL15
FS070	MINI FUSE	7.5 A	INTARDER KL15
FS071	MINI FUSE	5 A	TACHOGRAPH KL15
FS072	MINI FUSE	3 A	LDWS BUZZER
FS073	MINI FUSE	7.5 A	RADAR & CAMERA & PCCM KL15
FS074	MINI FUSE	7.5 A	TRANSMISSION CONTROL UNIT KL15
FS075	MINI FUSE	5 A	ECU KL15
FS076	MINI FUSE	3 A	ECAS RCU
FS077	MINI FUSE	10 A	HEATED SEAT
FS079	MINI FUSE	3 A	STOP LAMPS
FS080	MINI FUSE	15 A	AFTERMARKET&FLEET MANAGMENT KL15
FS081	MINI FUSE	3 A	MODULE - ERAGLONASS KL15
FS082	MINI FUSE	7.5 A	WORK LAMPS KL15
FS083	MINI FUSE	3 A	MFS SWITCH KL15
FS084	MINI FUSE	5 A	KL15 SWITCHES
FS085	MINI FUSE	10 A	BACKUP LAMPS
FS087	MINI FUSE	20 A	FUEL PREFILTER HEATER
FS088	MINI FUSE	7.5 A	AFTERMARKET CONNECTORS 7-PIN KL15
FS089	MINI FUSE	3 A	VOLTAGE CONVERTER 1 & 2 KL15
FS090	MINI FUSE	10 A	NOX SENSOR 1 & 2
FS091	MINI FUSE	7.5 A	UREA LEVEL-QUALITY SENSOR
FS092	MINI FUSE	15 A	EGR VALVE & TURBO ACTUATOR
FS093	MINI FUSE	7.5 A	LEVELLING & RAIN SENS & INT TEMP HUM.
FS094	MINI FUSE	5 A	SWITCH - POWER WINDOW
FS097	MINI FUSE	20 A	BODY CONTROL MODULE 12V KL30
FS098	MINI FUSE	7.5 A	CLIMATE CONTROL UNIT
FS099	MINI FUSE	7.5 A	EXTERIOR STOWAGE BOX LAMPS
FS100	MINI FUSE	3 A	HEADLAMP SWITCH
FS101	MINI FUSE	7.5 A	HORN& BLOWER MOTOR RELAYS COIL +
FS102	MINI FUSE	20 A	RADIO
R01	MINI RELAY	24V 40A	KL15 -1
R02	MINI RELAY	24V 40A	KL15 -2
R03	MICRO RELAY	12V 20A	BATTERY SAVER LATCHING
R04	MICRO RELAY	24V 20A	WORK LAMPS
R05	MINI RELAY	24V 40A	RUN/ACCESSORY
R06	MICRO RELAY	24V 20A	SUNBLIND MOTOR UP
R07	MICRO RELAY	24V 20A	ENGINE STOP
R08	MICRO RELAY	24V 20A	HORN
R09	MICRO RELAY	24V 20A	DENOX MODULE & UREA HEATER
R10	MINI RELAY	24V 40A	BLOWER MOTOR
R11	MICRO RELAY	24V 20A	BACKUP LAMPS & BUZZERS
R12	MICRO RELAY	24V 20A	NOX&UREA LEVEL& EGR VALVE &TURBO ACT
R13	MICRO RELAY		SPARE
R14	MICRO RELAY		SPARE
R15	MINI RELAY	24V 40A	CABIN TILTING MOTOR
R16	MICRO RELAY		SPARE
R17	MICRO RELAY	24V 20A	STOP LAMPS
R18	MICRO RELAY		SPARE
R19	MICRO RELAY	24V 20A	PARK LIGHTS
R20	MINI RELAY	24V 40A	HEATED WINDSHIELD 1
R21	MICRO RELAY	24V 20A	TRIPLE ROOF LAMPS
R22	MICRO RELAY		SPARE
R23	MICRO RELAY	24V 20A	ROOF BEACON LAMP
R24	MICRO RELAY	24V 20A	HEATED MIRRORS
R25	MINI RELAY	24V 40A	HEATED WINDSHIELD 2
R26	MICRO RELAY	24V 20A	DOOR LOCK SWITCHES
R27	MICRO RELAY	24V 20A	SUNBLIND MOTOR DOWN

REFERENCE N/A

PART MUST COMPLY WITH RESTRICTED SUBSTANCE MANAGEMENT STANDARD WSS-M99P9999 A1 TO SAFEGUARD HEALTH SAFETY AND THE ENVIRONMENT

DRAFTED IN ACCORDANCE WITH FORD MOTOR COMPANY ENGINEERING CAD AND DRAFTING STANDARDS VERSION 00.0

3RD ANGLE PROJ
DIMENSIONS ARE IN MILLIMETERS

CAD TYPE	CAD LOC.	CAD FILE	DTM
X-E3		RELAYS&FUSES	IS MASTER

OPER NO.	UNIT	DRAWING	SIZE
N/A	N/A		A0

DESIGN	DETAIL	TITLE:	SHT 1 OF 1
AGEZER1	-----	H625 - 2019 LP3 Design	

CHECKED	SAFETY
-----	MFG USE

SCALE	DATE	DIVISION: EESE
N/A	20190315	PLANT: N/A

SOURCE BY: M99P9999 (SHT) 11/22/2019 AGEZER1

PRINTED COPIES ARE UNCONTROLLED

LTRS	REVISIONS		
ORIGINATOR	CHECKER	ENGR APP	MATL APP

OPTION CODE DESCRIPTION

Harness	Description
A3AAK	CAB-HYDRAULIC TILT
A3AAM	ELECTRIC CAB TILTING
AGCAA	LESS DANGROUS GOOD TRNSPRT-ADR
AGCAB	DANGEROUS GOOD TRANSPORTN- ADR
B3MAB	ELECTRIC WINDSHIELD DEFROSTER
CLFB3	FRONT BUMPER-LONG
DG2AL	PLASTIC UREA EMIS TANK-55L
DG2AM	PLASTIC UREA EMIS TANK-78L
DGAA7	EURO 6 EMISSIONS
DGAB3	HVY DTY TRUCK EURO 5 RQMTS
DWAB2	MECHANICAL SUSPENSION
DWAB9	AIR SUSPENSION (C2AS)
DWABN	AIR SUSPENSION
EN JH	" 12.7L OHC C/RAIL DSL ECOTORQ B "
F2AAG	SNG HOR SS MUFF ICC/PIPE-LH
F2ABK	SING HORZ MUF/DU VERT PIPE-OF
FBAAL	ALL WHEEL DRUM BRAKES
FBABB	NON-VENTILATED DISC BRAKES
FBFAA	LESS COLLISION MITIGATION SYS
FBFAH	COLLISION MITIG INTEL EMER BRK
FD2AA	LESS RETARDER/INTARDER
FD2AB	HYDRAULIC RETARDER
GTDAJ	SPEED CONTROL & ASLD
GTDAM	ADAPTIVE SPD CONTROL AND ASLD
GTDAR	SPEED CNT, ASLD, PRDICT PTRAIN
GTDAS	ADP SPD CNT,ASLD,PRDICT PTRAIN
GZDAA	LESS AUX HOT WATER HEATER
GZDAE	AUX HOT WATER HEATER-WET TYPE
GZHAB	PARK HEATING
HJCAB	TIRE INFLATION MONITOR
HJCAB	TIRE INFLATION MONITOR
HKSAA	LESS EMERGENCY ASSISTANCE
HKSAC	AECS SMS/ROLL DETECT 2G AND 3G
HTABJ	225 AH BATTERY
IDBAX	4 SPEAKERS FRT/2 SPEAKERS RR
J3BAE	YELL LMP110-ROOF FRT/LHS-RR/RH
JBPAH	ROOF MARKER LAMPS - TRIPLE
SE B6	18 SERIES TRACTOR
SE C4	18 SERIES LOW LINER
WSPAK	ISRAEL

REFERENCE

PART MUST COMPLY WITH RESTRICTED SUBSTANCE MANAGEMENT STANDARD WSS-M99P9999 A1 TO SAFEGUARD HEALTH SAFETY AND THE ENVIRONMENT

DRAFTED IN ACCORDANCE WITH FORD MOTOR COMPANY ENGINEERING CAD AND DRAFTING STANDARDS VERSION 27.0

3RD ANGLE PROJ
DIMENSIONS ARE IN MILLIMETERS

CAD TYPE	CAD LOC.	CAD FILE	DTM IS MASTER
X-E3		OPTION_CODE_DESCRIPTION	
OPER NO. N/A	UNIT N/A	DRAWING	SIZE A1
DESIGN AGEZER1	DETAIL -----	TITLE: H625 - 2019 LP3 Design	SHT 1 OF 1
CHECKED -----	SAFETY MFG USE		
SCALE N/A	DATE 29032019	DIVISION: EESE	
		PLANT: N/A	

Modified By: AGEZER
Date Changed: 11/22/2019

H625 2019 LP3 Design
MULTIPLEXED ITEMS

LTRS	REVISIONS		
ORIGINATOR	CHECKER	ENGR APP	MATL APP

MULTIPLEXED ITEMS:

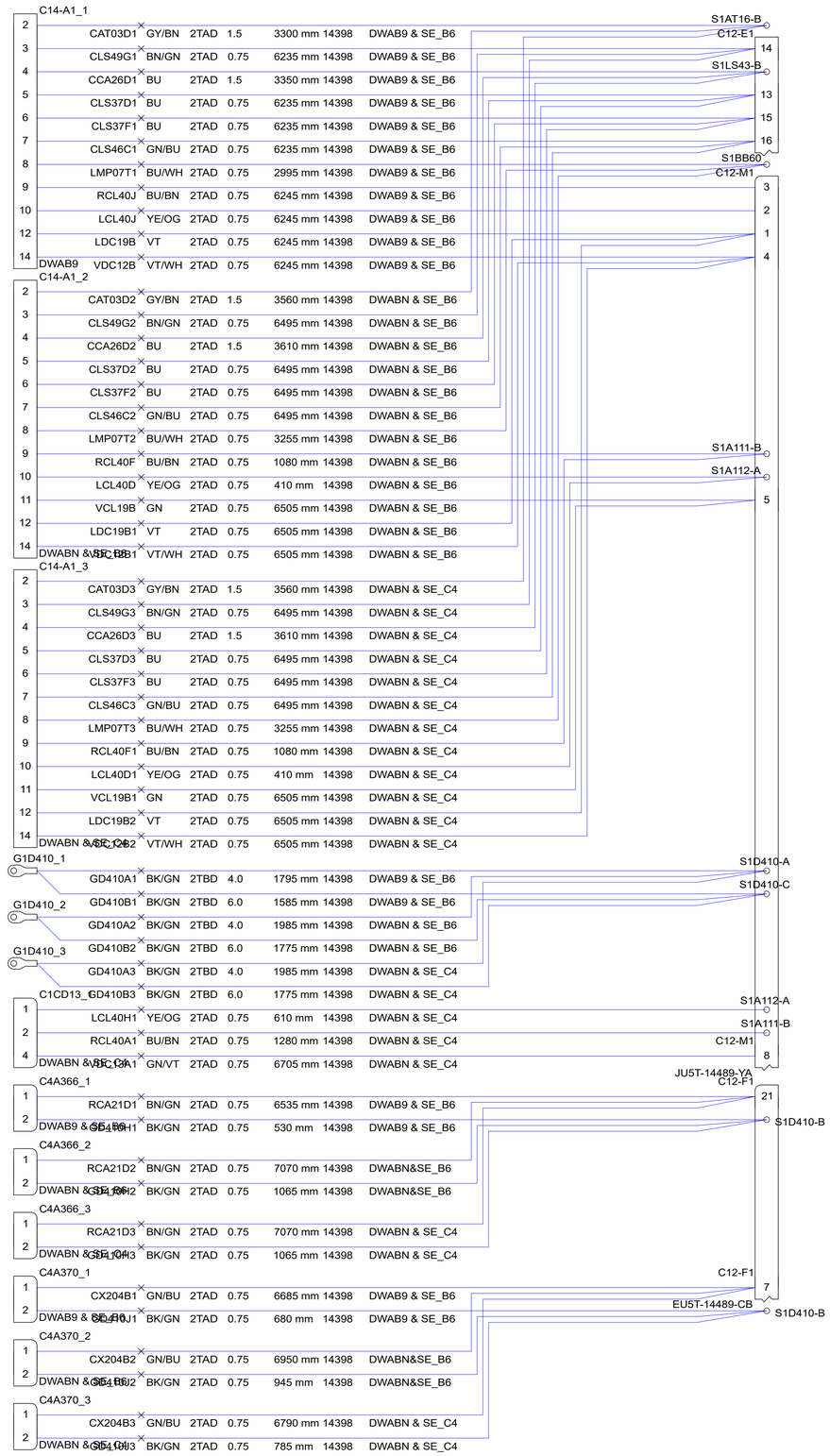

REFERENCE			
PART MUST COMPLY WITH RESTRICTED SUBSTANCE MANAGEMENT STANDARD WSS-M99P9999 A1 TO SAFEGUARD HEALTH SAFETY AND THE ENVIRONMENT			
DRAFTED IN ACCORDANCE WITH FORD MOTOR COMPANY ENGINEERING CAD AND DRAFTING STANDARDS VERSION 27.0		3RD ANGLE PROJ DIMENSIONS ARE IN MILLIMETERS	
CAD TYPE X-E3	CAD LOC.	CAD FILE MULTIPLEXED_ITEMS	DTM IS MASTER
OPER NO. N/A	UNIT N/A	DRAWING	SIZE A1
DESIGN fkarade3	DETAIL -----	TITLE: H625 - 2019 LP3 Design MULTIPLEXED ITEMS	SHT 1 OF 1
CHECKED -----	SAFETY MFG USE		
SCALE N/A	DATE 20171024	DIVISION: EESE	
		PLANT: N/A	

Modified By: NYKYLA1
Date Changed: 12/3/2019

H625 2019 LP3 Design
B3.03 - ENGINE CONTROL MODULE

LTRS	REVISIONS			
ORIGINATOR	CHECKER	ENGR APP	MATL APP	

ACTUATOR - TURBO CHARGER
+HRN-12A690 E103-A
E CAN (+) 4 VDB29
E CAN (-) 2 VDB30
PWR 6 ZA198
KL31 5 VDB30
CAN (+) 3 VDB29
CAN (-) 1 ZA198
E103
C1E103
E CAN
CBB92E YE/VT 4TAD 0.75 12A690 2430 mm DGAB3
CBB92C YE/VT 4TAD 0.75 12A690 380 mm DGAA7
GD481Y BK/GN 2TAD 0.75 12A690 2430 mm DGAB3
GD481X BK/GN 2TAD 0.75 12A690 1460 mm DGAA7
ZA199A OG/BU 2TAD 0.75 12A690 200 mm
CUT_ONLY_1
ZA198A OG/YE 2TAD 0.75 12A690 145 mm
CUT_ONLY_2

VALVE - EGR
KL31 3 VDB30
PWR 4 ZA198
E CAN (+) 1 VDB29
E CAN (-) 2 VDB30
E108 TBD-004-M
C1E108
GD481W BK/GN 4TAD 0.75 DGAA7 12A690 845 mm DGAA7
CBB92F GN/WH 4TAD 1.0 DGAA7 12A690 1925 mm DGAA7
S1D481-C
S1BB92
DGAA7
E CAN
DGAA7 JU5T-14A464-ARA

C11-A1 GND 1 1
ACTUATOR - TURBO CHARGER & VALVE - EGR PWR 12 12
SENSOR - LAY SHAFT SPEED SIG 17 17
SENSOR - LAY SHAFT SPEED GND 18 18
S1D481-C GND 9 9
C11-A1 BCM - CLUTCH A/C COMPRESSOR 10 10
C11-A2
GD481V BK/GN 2TAD 1.5 12A690 1600 mm DGAA7
CBB92D GN/WH 2TAD 1.0 12A690 2050 mm DGAA7
RET33A WH/VT 2TAD 0.75 12A690 1529 mm
VET33A WH/OG 2TAD 0.75 12A690 1529 mm
CH401A VT/WH 2TAD 1.0 12A690 2310 mm
C1H302 1 PWR CH401 H302
SOLENOID - A/C CLUTCH COMPRESSOR

ENGINE START STOP SWITCH
+HRN-12A690 CPK45 A190
LE423
CE937 TBD-003-M
+HRN-12A690 C1PK45
CPK45B YE/VT 2TAD 0.75 12A690 1980 mm
LE423H GN/VT 2TAD 0.75 12A690 1980 mm
CE937E VT/GY 2TAD 0.75 12A690 1980 mm
C11-A2 C11-A1
JU5T-14A624-CA
09441391 KOSTAL CON

C1E115-B
91 I_F_DF05 RET33
92 G_R_DF05 VET33
O_T_RL04 CE604 20
O_V_RH32 CE606 24
O_T_RL05 CDC15 47
E115
MODULE - ENGINE CONTROL (ENGINE SIDE)

C1E604 E604-A RL-GND CE604
RL-PWR CE606
E604
RELAY - GRID HEATER COIL
CE606D GN/OG 2TAD 0.75 12A690 190 mm
CE606A GN/OG 2TAD 1.5 12A690 405 mm
S1E606
CE606C GN/OG 2TAD 0.75 12A690 315 mm
C1DC15
RESISTOR
R1 RESISTOR 2k
CDC15A VT 2TAD 0.75 12A690 815 mm
S1DC15
CDC15B VT 2TAD 0.75 12A690 195 mm
TBD-002-M

C11-B2 16 16 17 17 C11-B1

ALTERNATOR
DC06 DC06-A
IG 3 CDC15
L 4 CDC06
W 5 VDC73
TBD-005-M
C1DC06
CDC15C VT 2TAD 0.75 12A690 245 mm
CDC06A VT/WH 2TAD 0.75 12A690 2065 mm
VDC73A GN/WH 2TAD 0.75 12A690 2065 mm
TBD-005-F
C11-A2 C11-A1
+HRN-12A690 +HRN-12A690
C11-B2 C11-B1

VALVE - METERING
E351 E351-A
PWR 1 VE351
GND 2 VE350
C1E351
DGAA7
VE351A VT/OG 2TAD 0.75 12A690 1046 mm DGAA7
VE350A GY 2TAD 0.75 12A690 1046 mm DGAA7

VALVE - SHUT OFF
E357 E357-A
PWR 1 LE357
GND 2 RE357
C1E357
DGAA7
LE357A WH 2TAD 0.75 12A690 1046 mm DGAA7
RE357A VT/WH 2TAD 0.75 12A690 1046 mm DGAA7
TBD-002-F

ET05 ET05-A
GND 1 RE771
SIG2 2 RE803
SIG1 4 VE803
C1ET05
DGAA7
RE771B GY/OG 2TAD 0.75 12A690 1045 mm DGAA7
RE803A BN/GN 2TAD 0.75 12A690 1062 mm DGAA7
VE803A BU/GN 2TAD 0.75 12A690 1062 mm DGAA7
2S7T-14A464-DC
V_V_5VSS2B VE804 33
VE804C GN/BN 2TAD 0.75 12A690 720 mm DGAA7
S1E804
VE804A GN/BN 2TAD 0.75 12A690 160 mm DGAA7
2S7T-14A464-DC
ET05-A PWR VE804
SENSOR - PRESSURE HCI UPSTREAM

VE804B GN/BN 2TAD 0.75 12A690 280 mm DGAA7
C1ET08
DGAA7
ET08 ET08-A
PWR VE804
GND RE769
SIG VE770
C1ET08
DGAA7
RE769A BU/GN 2TAD 0.75 12A690 1082 mm DGAA7
VE770A GY/BN 2TAD 0.75 12A690 1082 mm DGAA7
SENSOR - PRESSURE HCI DOWNSTREAM

G_R_RES CE613 89
CE613A WH/VT 2TAD 0.75 12A690 1505 mm
O_V_RH22 CE612 96
CE612A GY/VT 2TAD 1.0 12A690 1505 mm
C11-B2 C11-B1
JU5T-14A624-EA

REFERENCE			
PART MUST COMPLY WITH RESTRICTED SUBSTANCE MANAGEMENT STANDARD WSS-M99P9999 A1 TO SAFEGUARD HEALTH SAFETY AND THE ENVIRONMENT			
DRAFTED IN ACCORDANCE WITH FORD MOTOR COMPANY ENGINEERING CAD AND DRAFTING STANDARDS VERSION 27.0		3RD ANGLE PROJ DIMENSIONS ARE IN MILLIMETERS	
CAD TYPE X-E3	CAD LOC. -----	CAD FILE PHJC46-70B051-A1	DTM IS MASTER
OPER NO. -----	UNIT -----	DRAWING	SIZE A1
DESIGN fkarade3	DETAIL -----	TITLE: MY 2019 H625 - 2019 LP3 Design ENGINE CONTROL MODULE - ENGINE SIDE	SHT 2 OF 5
CHECKED -----	SAFETY -----		
SCALE NTS	DATE 20150731	DIVISION: EESE	
		PLANT: -----	

Modified By: AGEZER1
Date Changed: 1/24/2019

H625 2019 LP3 Design
B3.03 - ENGINE CONTROL MODULE

LTRS	REVISIONS			
ORIGINATOR	CHECKER	ENGR APP	MATL APP	

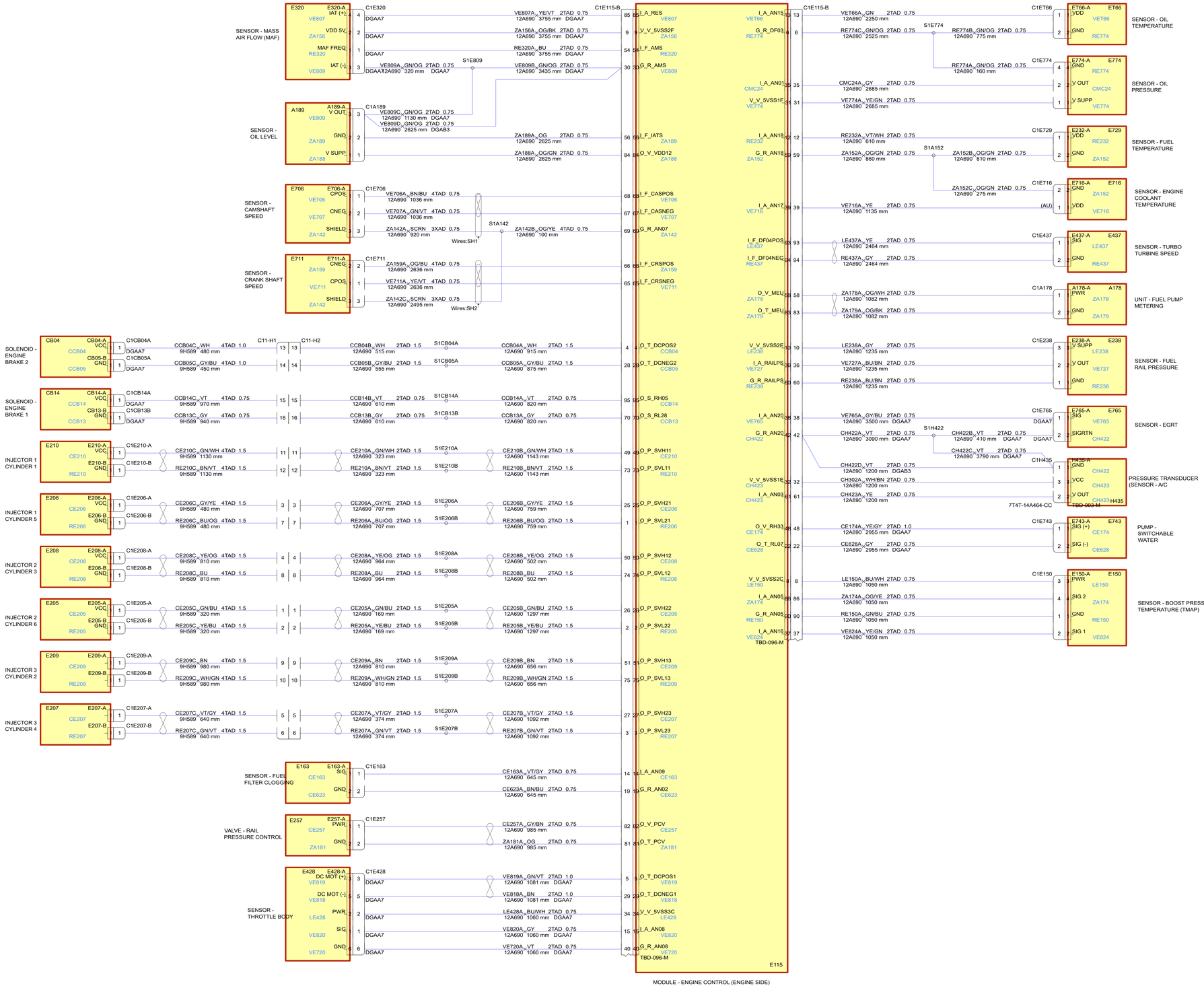

REFERENCE	N/A
	PART MUST COMPLY WITH RESTRICTED SUBSTANCE MANAGEMENT STANDARD WSS-M99P9999 A1 TO SAFEGUARD HEALTH SAFETY AND THE ENVIRONMENT
	DRAFTED IN ACCORDANCE WITH FORD MOTOR COMPANY ENGINEERING CAD AND DRAFTING STANDARDS VERSION 27.0
	3RD ANGLE PROJ DIMENSIONS ARE IN MILLIMETERS
CAD TYPE	X-E3
CAD LOC.	-----
CAD FILE	PHJC46-70B051-A2
	DTM IS MASTER
OPER NO.	-----
UNIT	-----
DRAWING	
SIZE	A0
DESIGN	fkarade3
DETAIL	-----
TITLE:	MY 2019 H625 - 2019 LP3 Design ENGINE CONTROL MODULE - ENGINE SIDE
SHT	3
OF	5
CHECKED	-----
SAFETY	-----
SCALE	NTS
DATE	20150731
DIVISION:	EESE
PLANT:	-----

PRINTED COPIES ARE UNCONTROLLED

LTRS	REVISIONS		
ORIGINATOR	CHECKER	ENGR APP	MATL APP

H625 2019 LP3 Design
C3.01 - ENGINE CAN J1939 NETWORK

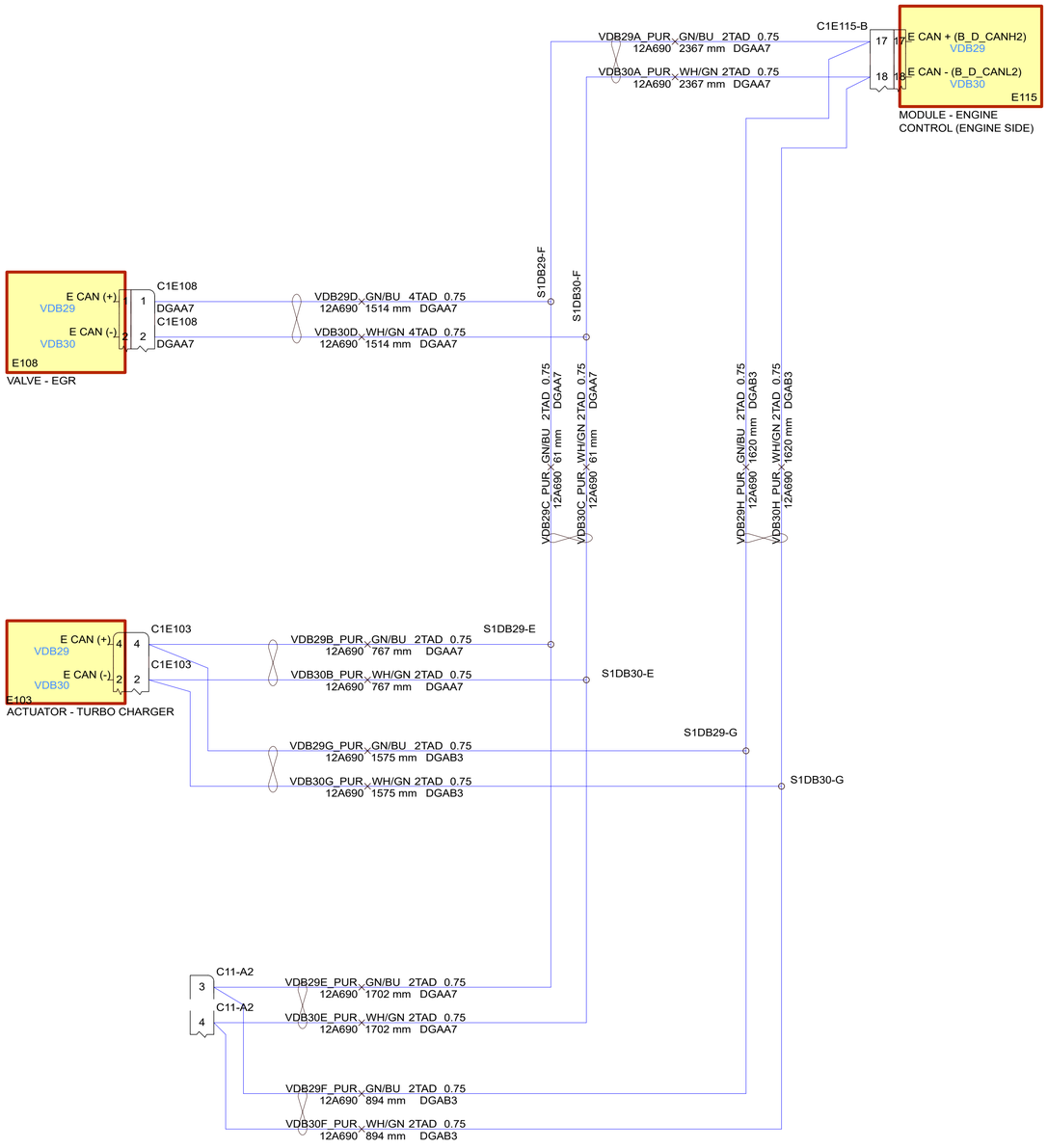

REFERENCE			
PART MUST COMPLY WITH RESTRICTED SUBSTANCE MANAGEMENT STANDARD WSS-M99P9999 A1 TO SAFEGUARD HEALTH SAFETY AND THE ENVIRONMENT			
DRAFTED IN ACCORDANCE WITH FORD MOTOR COMPANY ENGINEERING CAD AND DRAFTING STANDARDS VERSION 27.0		3RD ANGLE PROJ DIMENSIONS ARE IN MILLIMETERS	
CAD TYPE X-E3	CAD LOC. -----	CAD FILE PHJC46-70C030-A2	DTM IS MASTER
OPER NO. -----	UNIT -----	DRAWING	SIZE A1
DESIGN sakay	DETAIL -----	TITLE: MY 2019 H625 - 2019 LP3 Design ENGINE CAN J1939 NETWORK	SHT 4 OF 5
CHECKED -----	SAFETY -----		
SCALE NTS	DATE 20161027	DIVISION: EESE	
		PLANT: -----	

Modified By: AGEZER
Date Changed: 12/5/2019

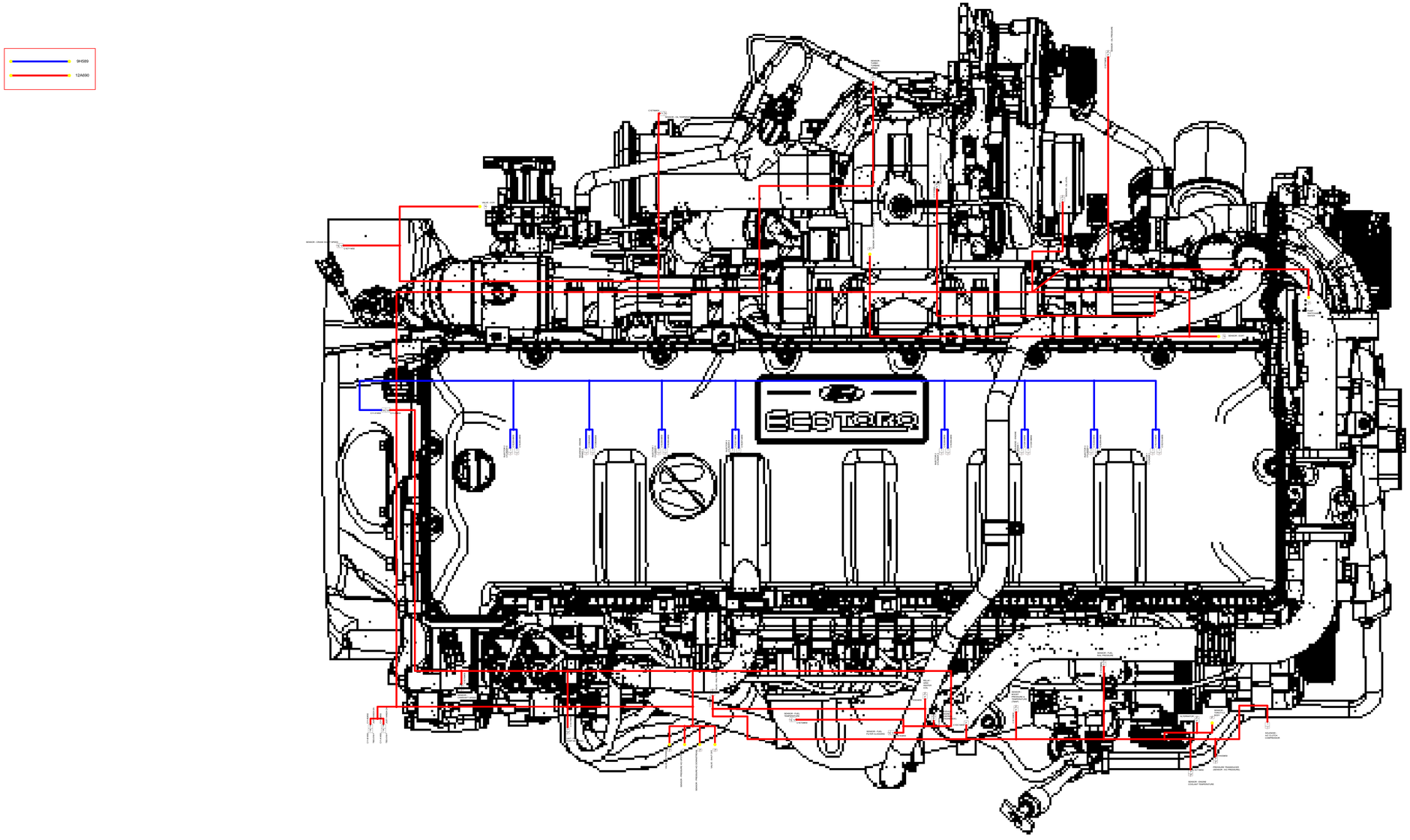
9H589
12A690